OLYMPUS®

Your Vision, Our Future

MICROSCOPE COMPONENTS GUIDE

Choosing The Ideal UIS2 Optics Components For Your Equipment

UIS2 World-leading optics

2008-04

OLYMPUS CORPORATION has obtained ISO9001/ISO14001

Illumination devices for microscope have suggested lifetimes. Periodic inspections are required. Visit our Website for details.

Specifications are subject to change without any obligation on the part of the manufacturer.

OLYMPUS®

www.olympus.com

OLYMPUS CORPORATION
Shinjuku Monolith, 3-1, Nishi Shinjuku 2-chome, Shinjuku-ku, Tokyo, Japan

OLYMPUS LIFE SCIENCE EUROPA GMBH
Postfach 10 49 08, 20034, Hamburg, Germany

OLYMPUS SURGICAL & INDUSTRIAL AMERICA INC.
One Corporate Drive, Orangeburg, NY 10962, U.S.A.

OLYMPUS AUSTRALIA PTY. LTD.
31 Gilby Road, Mt. Waverley, VIC 3149, Melbourne, Australia.

OLYMPUS LATIN AMERICA, INC.
5301 Blue Lagoon Drive, Suite 290 Miami, FL 33126, U.S.A.

Printed in Japan M1630E-0408B

UIS2

World-leading optics

The wide range of Olympus components introduced here allows users in such diverse fields as research, inspection and production to take advantage of the quality, flexibility and outstanding optical performance of the UIS2 Optical System. That's why installing Olympus microscope components is, quite simply, the right choice for your equipment.

CONTENTS

WELCOME TO UIS2/UIS OPTICS ---------- 3 — 4

SYSTEM DIAGRAM ---------- 5 — 6

UIS2/UIS OBJECTIVE LENSES ---------- 7 — 18

- M Plan SemiApochromat — MPLFLN series ---------- 8
- Long WD M Plan SemiApochromat — LMPLFLN series ---------- 9
- M Plan Achromat — MPLN series ---------- 10
- LCD Long WD M Plan SemiApochromat — LCPLFLN-LCD series ---------- 11
- M Plan Apochromat — MPlanApo series ---------- 12
- NEW Super Long WD M Plan Achromat — SLMPLN series ---------- 12
- IR Long WD M Plan Achromat — LMPlan-IR series ---------- 13
- IR M Plan Achromat — MPlan-IR ---------- 13
- M Plan SemiApochromat BD — MPLFLN-BD series ---------- 14
- M Plan SemiApochromat BDP — MPLFLN-BDP series ---------- 15
- Long WD M Plan SemiApochromat BD — LMPLFLN-BD series ---------- 16
- M Plan Achromat BD — MPLN-BD series ---------- 17
- M Plan Apochromat BD — MPlanApo-BD ---------- 18

MICROSCOPE SYSTEM BXFM ---------- 19 — 22

- BXFM frame — BXFM-F ---------- 19
- BXFM — BXFM-F+BXFM-ILH+BXFM-ILHSPU ---------- 20
- BXFM-S — BXFM-F+BXFM-ILHS ---------- 21
- Universal stand type 2 — SZ2-STU2 ---------- 22
- Compact stand — U-ST ---------- 22
- Large stand — SZ-STL ---------- 22

ILLUMINATION UNITS ---------- 23 — 25

- Reflected light illuminator for BF/DF — BX-RLA2 ---------- 23
- Universal reflected light illuminator — BX-URA2 ---------- 23
- Reflected light illuminators for BF — BX-KMA/BX-KMA-ESD ---------- 24
- Reflected light illuminator for BF — U-KMAS ---------- 25

LAMP HOUSING & ACCESSORIES ---------- 26 — 28

- 75W xenon apo lamp housing — U-LH75XEAPO ---------- 26
- 100W mercury apo lamp housing — U-LH100HGAPO ---------- 26
- 100W mercury lamp housing — U-LH100HG ---------- 26
- 100W halogen lamp housings — U-LH100-3/U-LH100IR/U-LH100L-3 ---------- 26
- External power supply — TH4-100/200 ---------- 27
- Hand switch — TH4-HS ---------- 27
- Extension cord — U-RMT ---------- 27
- DF converter for BX-URA2 — U-RCV ---------- 27
- Fiber adapter for reflected light observation — U-LGAD ---------- 27
- Transmitted light guide adapter — SZX-TLGAD ---------- 27
- Light source — LG-PS2 ---------- 28
- Light guide — LG-SF ---------- 28
- Double lamp house adapter — U-DULHA ---------- 28

OBSERVATION TUBES ---------- 29 — 30

- Widefield trinocular tube — U-TR30-2 ---------- 29
- Widefield trinocular tube for IR — U-TR30IR ---------- 29
- Widefield erect image trinocular tube — U-ETR-4 ---------- 29
- Single port tube with lens — U-TLU ---------- 29
- Single port tube with lens for IR — U-TLUIR ---------- 29
- Super widefield trinocular tube — U-SWTR-3 ---------- 30
- Super widefield erect image trinocular tube — U-SWETR ---------- 30
- Super widefield erect image tilting trinocular tube — MX-SWETTR ---------- 30

INTERMEDIATE TUBES & ACCESSORIES ---------- 31 — 32

- Magnification changer — U-CA ---------- 31
- Magnification changer 2x — U-ECA ---------- 31
- Trinocular intermediate attachment — U-TRU ---------- 31
- Dual port — U-DP ---------- 32
- Dual port 1x — U-DP1xC ---------- 32
- Eyepoint adjuster — U-EPA2 ---------- 32
- Arrow pointer — U-APT ---------- 32

EYEPIECES/FILAR MICROMETER EYEPIECE ---------- 33

- Widefield eyepieces — WHN10x, WHN10x-H, CROSSWHN10x, WH15x ---------- 33
- Super widefield eyepieces — SWH10x-H, MICROSWH10x, CROSSSWH10x ---------- 33
- Filar micrometer eyepiece — U-OSM ---------- 33

REVOLVING NOSEPIECES ---------- 34 — 35

- Quintuple revolving nosepiece — U-5RE-2 ---------- 34
- Sextuple revolving nosepiece with slider slot for DIC — U-D6RE ---------- 34
- Sextuple revolving nosepiece with slider slot for DIC with ESD treatment — U-D6RE-ESD ---------- 34
- Septuple revolving nosepiece with slider slot for DIC — U-D7RE ---------- 34
- Centerable quadruple revolving nosepiece with slider slot for DIC — U-P4RE ---------- 34
- Centerable sextuple revolving nosepiece with slider slot for DIC — U-P6RE ---------- 34
- Quintuple revolving nosepiece for BF/DF — U-5BDRE ---------- 35
- Quintuple revolving nosepiece for BF/DF with slider slot for DIC — U-D5BDRE ---------- 35
- Sextuple revolving nosepiece for BF/DF with slider slot for DIC/ — U-D6BDRE ---------- 35
- Centerable quintuple revolving nosepiece — U-P5BDRE ---------- 35
- Adapter to mount BF objectives — BD-M-AD ---------- 35

VIDEO CAMERA ADAPTERS ---------- 36 — 37

- C-mount video camera ports — U-TV0.25xC, U-TV0.35xC-2, U-TV0.5xC-3, U-TV0.63xC ---------- 36
- Video camera mount adapters — U-CMAD3, U-BMAD, U-SMAD, U-TMAD, U-FMT ---------- 37
- Video camera port — U-TV1x-2 ---------- 37

MOTORIZED UNITS ---------- 38 — 41

- Motorized BF/DF reflected light illuminator+motorized Nomarski DIC sextuple revolving nosepiece+100W halogen lamp housing — BX-RLAA+U-D6REMC+U-LH100-3 ---------- 38
- Motorized universal reflected light illuminator — BX-RFAA ---------- 38
- NEW Motorized sextuple BD revolving nosepiece with slider slot for DIC — U-D6BDREMC ---------- 39
- NEW Motorized centerable quintuple revolving nosepiece with slider slot for DIC — U-P5BDREMC ---------- 39
- Motorized quintuple BD revolving nosepiece with slider slot for DIC — U-D5BDREMC ---------- 39
- Motorized sextuple revolving nosepiece with slider slot for DIC — U-D6REMC ---------- 39
- Motorized centerable quintuple revolving nosepiece with slider slot for DIC — U-P5REMC ---------- 39
- Control unit — BX-UCB ---------- 39
- Hand switch — U-HSTR2 ---------- 39
- Control box for motorized nosepiece and BF/DF illuminator — BX-REMCB ---------- 39
- AC adapter for BX-REMCB — U-ACAD4515 ---------- 39
- NEW Active auto focus unit — U-AFA2M-VIS ---------- 40
- Motorized reflected filter wheel — U-FWR ---------- 40
- Motorized illumination with power focus — BXFMA-F ---------- 41

DEEP ULTRAVIOLET OBSERVATION SYSTEM ---------- 42

- UV248 compatible intermediate tube — U-UVF248IM ---------- 42
- UV quartz light guide — U-UVF2FV/5FB ---------- 42
- UV248 compatible light source box + Mercury Xenon lamp housing — U-UVF248LB+U-LH80HBXE ---------- 42

OPTICAL TERMINOLOGY ---------- 43 — 46

UIS2/UIS:
The System That Maximizes The Advantage Of Infinity-Corrected Optics

What's infinity-corrected optics?

UIS2/UIS optics is an infinity-corrected optical system — in other words, a system in which light passes from the specimen through the objective lens without forming an image along the way. Instead, it travels in the form of infinity parallel rays to the tube lens. The tube lens is where the intermediate image is formed, whereas in finite-corrected optics, this is done by the objective lens.

Figure 1 Infinity-corrected and finite-corrected optical system principles

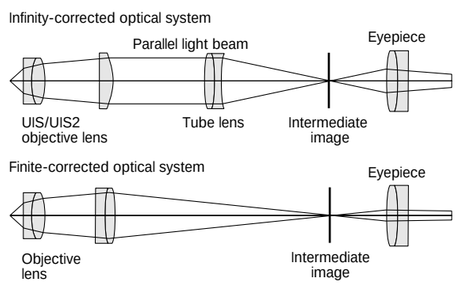

Advantages of infinity-corrected optics

This system, known as "infinity-corrected optics", offers a number of advantages:

- There is no change in magnification even when the distance between the objective lens and tube lens is altered.
- With the total magnification remaining constant, there is no image aberration — even when prisms or sliders are interposed between the objective lens and the tube lens.

As thousands of users have found by experience, these advantages are crucial to composing the ideal microscope optical system. What's more, it is even possible to freely insert or remove intermediate attachments in the parallel rays of light between the objective lens and tube lens, allowing the creation of user-specific or task-specific optical systems. To establish real flexibility with such a system, it is necessary to eliminate the occurrence of coma aberration.

**In UIS2/UIS objective lenses, the parfocal distance is designed at 45mm and the focal length of the tube lens is 180mm.*

Figure 2 Advantages of Infinity-corrected optical system

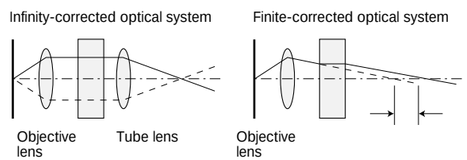

Basic dimensions of UIS2/UIS optical system

The UIS2/UIS optical system optimally corrects aberration with a dedicated telan lens and an eyepiece so that the coma aberration and flatness are not degraded even when the telan lens exit pupil position is changed by changing the objective lens and telan distance. This makes it possible to use a distance of 50mm to 170mm from objective lens mounting position to the single port tube with lens.

**Coma aberration: refer to the optical terminology at the end of this document.*

Figure 3 Basic dimensions of UIS2/UIS2 optical system

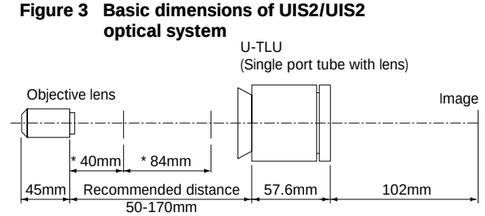

*Basic dimensions when our revolving nosepiece and illuminator are combined. When the position of the illuminator above is changed, illumination performance cannot be maintained.

WELCOME TO UIS2/UIS OPTICS

Features of UIS2 objective lenses

UIS2 objective lenses ensure compatibility (screw diameter, optical performance) with the UIS optical system and have the following features compared to conventional objective lenses.

1. Wavefront aberration control
   The Olympus UIS2 objective lenses set a new standard, with wavefront aberration control in addition to common performance standards of N.A. and W.D. Olympus challenges farther highest order optics which has not been fulfilled by the conventional standards. We offer excellent performance objective lenses by minimizing the aberrations that lower resolution.
   **Wave front aberration: refer to the optical terminology at the end of this document.*

2. Objective lenses with excellent image parcentricity
   High power SemiApochromatic UIS2 objective lenses make the centration tolerance between objective lenses on the microscope nosepiece keep the image within the enter of the field of view even with digital cameras. (50x or higher power in both MPLFLN and LMPLFLN series)

3. Improvement of color reproducibility
   UIS2 objective lenses realize natural color reproduction without any chromatic shifts using stringently selected high transmittance glass and advanced coating technology that provides high transmittance which is flat over an ultra-wide band wavelength. In addition, since the total optical system, including the tube lens is designed to reproduce a natural color, clear images faithful to the specimen are obtained even with digital imaging.

4. Lightening
   Weight has been reduced to approximately 2/3 that of conventional products by using an aluminum objective lens barrel cover. This has the effect of lightening the load on the devices at objective lens up/down, suppressing vibrations by lowering the inertial force at objective lens switching, etc. (MPLFLN series, LMPLFLN series)

5. Adoption of eco-lens
   The glass materials of UIS2 objective lenses are all lead- and cadmium-free eco-glass.

Based on our conviction that the UIS2/UIS system is the best way to maximize the advantages of infinity-corrected optical systems, we confidently recommend the UIS2/UIS-featured Olympus microscope units for all your high-precision needs in research, inspection and production equipment.

** Refer to the Olympus home page for detailed objective lenses specifications.*

SYSTEM DIAGRAM

BXFM SYSTEM DIAGRAM

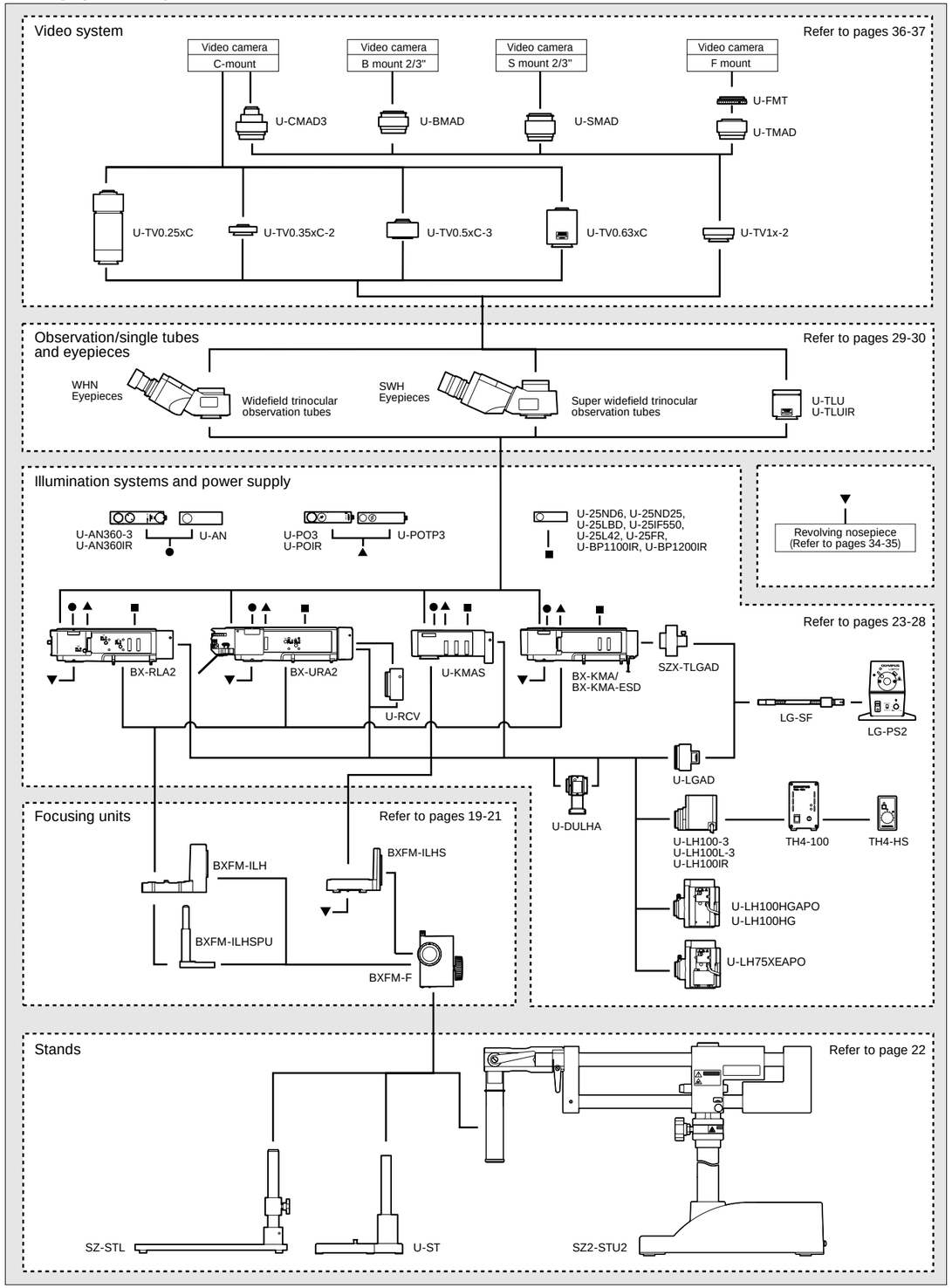

*Different types may be offered in each area.

SYSTEM DIAGRAM

MOTORIZED UNIT SYSTEM DIAGRAM

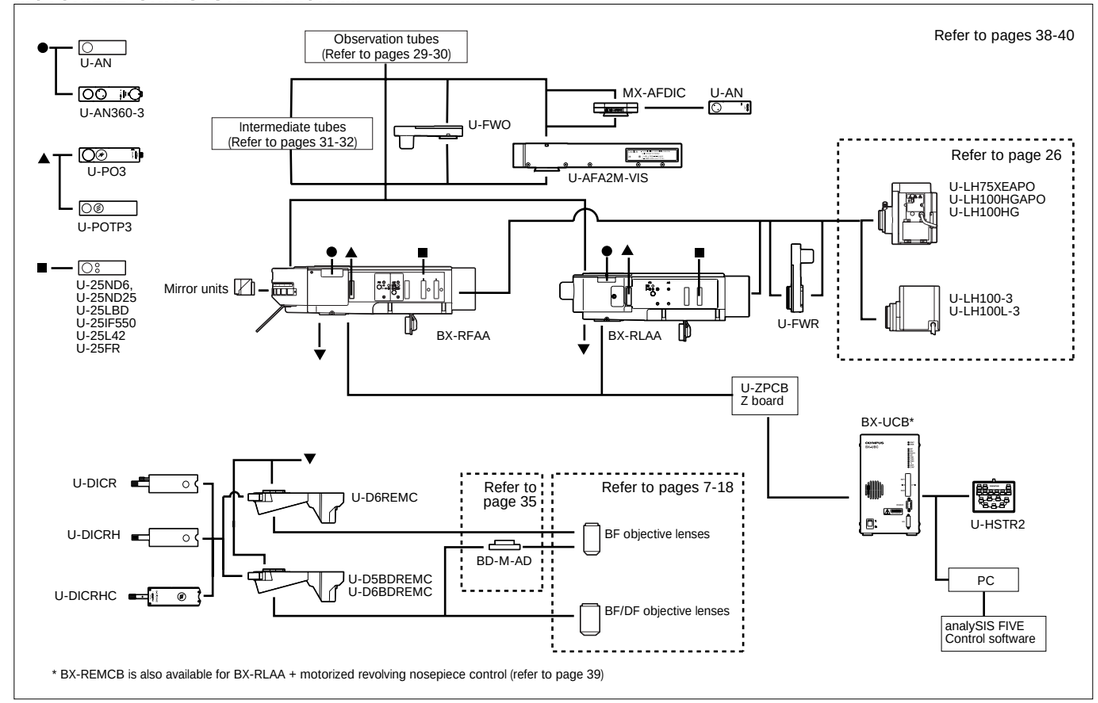

BXFM-A SYSTEM DIAGRAM

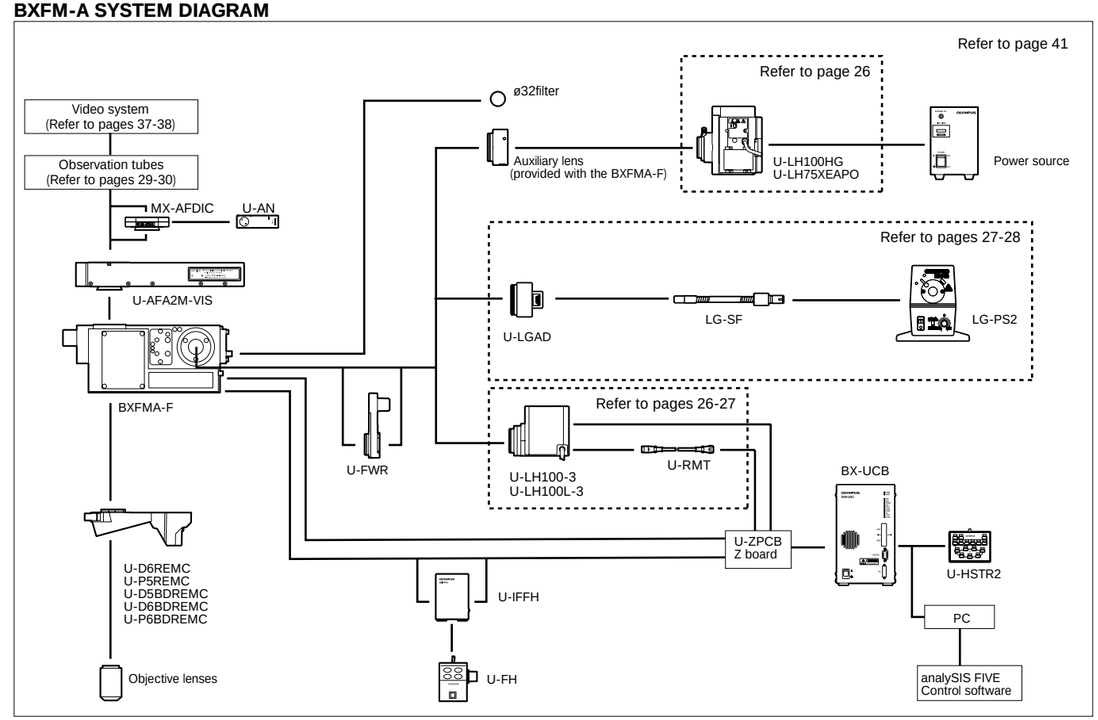

■ Meaning of abbreviations shown on objective lens

M P L (Plan) F L N - 1 0 0 B D

- **M:** Metallurgical (no cover)
  - **LM:** Long working distance metallurgical use
  - **SLM:** Super long working distance metallurgical use
  - **LC:** Observation through substrate
- **PL:** Plan/ Corrects field curvature of the periphery of the image plane
- **None:** Achromat/ Corrects aberration at 2 wavelengths of blue and red
  - **FL:** SemiApochromat/ Corrects chromatic aberration in the visible range (violet~red)
  - **APO:** Apochromat/ Optimally corrects chromatic aberration in the entire visible band (violet~red)
- **None:** UIS
  - **N:** UIS2
- **Number:** Objective lens magnification
- **None:** Brightfield
  - **BD:** Brightfield/darkfield
  - **BDP:** Brightfield/darkfield/ polarizing
  - **IR:** IR
  - **LCD:** LCD

■ Objective lens notation

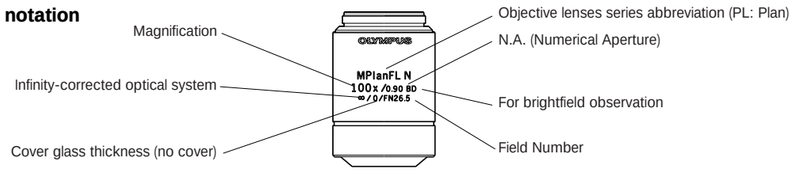

■ Objective lens series list

Series		Magnification	BF	DF	DIC*1	POL	FL	F.N. (Field Number)	Remarks
UIS2	MPLFLN	1.25/2.5	○					1.25x: 22 / 2.5x: 26.5	Use together with polarizer and analyzer recommended
		5/10/20/50/100	○		○U	○	○*2	26.5	
	LMPLFLN	5/10/20/50/100	○		○L	○	○	26.5	
	MPLN	5/10/20/50/100	○					22	
	LCPLFLN-LCD	20/50/100	○		○L			26.5	For LCD
UIS	MPlanApo	50/100	○		○*3U	○		26.5	
UIS2	SLMPLN	20/50/100	○					26.5	
UIS	LMPlanIR/MPlanIR	5/10/20/50/100 *4	○					22	For near-IR observation
UIS2	MPLFLN-BD	5/10/20/50/100/150	○	○	○U	○	○*2	26.5	
	MPLFLN-BDP	5/10/20/50/100	○	○	●U	●	○*2	26.5	
	LMPLFLN-BD	5/10/20/50/100	○	○	○L	○	○	26.5	
	MPLN-BD	5/10/20/50/100	○	○				22	
UIS	MPlanApo-BD	100	○	○	○U	○		26.5	

*1 DIC prism U-DICR: UM/LM position, U-DICRHC: LM position fixed, U-DICRH: UM position fixed. *2 5~20x: U excitation also possible
*3 50x: DIC observation not applicable *4 MPlanIR: available 100x only ○: Responds ●: Optimally responds BF: Brightfield DF: Darkfield
DIC: Differential Interference Contrast POL: Polarized light FL: Fluorescence

■ Features of objective lens series

● **MPLFLN series: M Plan SemiApochromat — P 8**
Plan SemiApochromat objective lenses, giving high-level correction for chromatic aberration. The lineup consists of 7 objective lenses ranging from 1.25x to 100x, and secures a W.D. of 1mm or longer. Since the exit pupil position of the 5x-100x objective lenses is standardized, the position of the DIC prism does not have to be switched when changing the magnification. For ultra low magnifications (1.25x, 2.5x), use together with analyzer and polarizer of the reflected light illuminator.

● **LMPLFLN series: Long WD M Plan SemiApochromat — P 9**
Long working distance Plan SemiApochromat objective lenses, giving high-level correction for chromatic aberration. Suitable with samples having a height difference and in preventing collision, as the working distance is long. Also, since the exit pupil position of the 5x-100x objective lenses is standardized, the position of the DIC prism does not have to be switched when changing the magnification.

● **MPLN series: M Plan Achromat — P 10**
Plan Achromat objective lenses providing excellent image flatness up to F.N. 22.

● **LCPLFLN-LCD series: LCD Long WD M Plan SemiApochromat — P 11**
Perfect objective lens series for observation of LCD panels and other samples through a glass substrate. Aberration correction matched to the glass thickness is accomplished using a correction ring.

● **MPlanApo series: M Plan Apochromat — P 12**
Highest class Plan Apochromat objective lenses that maximize performance in brightfield observation. All aberrations are corrected at the highest level, while providing high N.A.

● **SLMPLN series: Super Long WD M Plan Achromat — P 12**
Plan Achromat objective lenses with high magnification and super long working distance. Three magnifications, 20x, 50x and 100x are available. For 5x or 10x objective lenses, select from the LMPLFLN Series.

● **LMPlan-IR series: IR Long WD M Plan Achromat — P 13**
MPlan-IR: IR M Plan Achromat — P 13
IR objective lenses which compensate for aberrations from visible to near infrared light. Ideal for the observations of semiconductor interiors and the back surface of a chip package as well as CSP bump inspection.

● **MPLFLN-BD series: M Plan SemiApochromat BD — P 14**
Plan SemiApochromat objective lenses, giving high-level correction for chromatic aberration. The series secures a W.D. of 1mm or longer. Since the exit pupil position of the 5x-150x objective lenses is standardized, the position of the DIC prism does not have to be switched when changing the magnification.

● **MPLFLN-BDP series: M Plan SemiApochromat BDP — P 15**
Plan SemiApochromat objective lenses, giving high-level correction for chromatic aberration. The series secures a W.D. of 1mm or longer. Since the exit pupil position of the 5x-100x objective lenses is standardized, the position of the DIC prism does not have to be switched when changing the magnification. The BDP series optimizing brightfield/darkfield and polarized light characteristics is perfect for Nomarski DIC and polarized light observations.

● **LMPLFLN-BD series: Long WD M Plan SemiApochromat BD — P 16**
Long working distance Plan SemiApochromat objective lenses, giving high-level correction for chromatic aberration. Suitable with samples having a height difference and in preventing collision, as the working distance is long. Also, since the exit pupil position of the 5x-100x objective lenses is standardized, the position of the DIC prism does not have to be switched when changing the magnification.

● **MPLN-BD series: M Plan Achromat BD — P 17**
Plan Achromat objective lenses providing excellent image flatness up to F.N. 22.

● **MPlanApo BD: Plan Apochromat BD — P 18**
Highest class Plan Apochromat objective lens that maximize performance in brightfield and darkfield observations. All aberrations are corrected at the highest level, while providing high N.A.

M Plan SemiApochromat

MPLFLN series

UIS2 World-leading optics

Plan SemiApochromat objective lenses, giving high-level correction for chromatic aberration. The lineup consists of 7 objective lenses ranging from 1.25x to 100x, and secures a W.D. of 1mm or longer. Since the exit pupil position of the 5x-100x objective lenses is standardized, the position of the DIC prism does not have to be switched when changing the magnification.
For ultra low magnifications (1.25x, 2.5x), use together with analyzer and polarizer of the reflected light illuminator.

MPLFLN1.25x

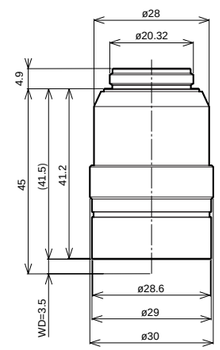

MPLFLN2.5x

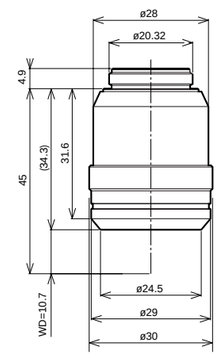

MPLFLN5x

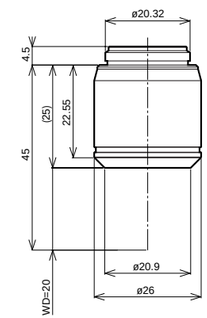

MPLFLN10x

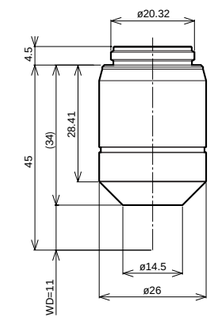

MPLFLN20x

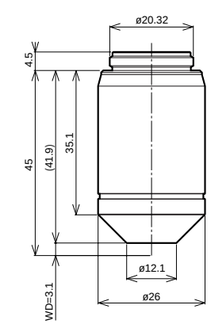

MPLFLN50x

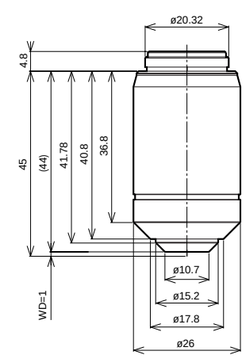

MPLFLN100x

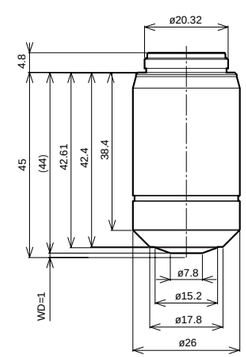

Unit: mm

UIS2 objective lenses					Widefield eyepiece WHN10x Field Number 22			Super widefield eyepiece SWH10x Field Number 26.5		
Objective lens (magnification)	Numerical Aperture	Working distance (mm)	Focal distance f (mm)	Weight (g)	Total magnifications	Practical field of view (mm)	Depth of focus (µm)	Total magnifications	Practical field of view (mm)	Depth of focus (µm)
MPLFLN 1.25x*	0.04	3.5	145	122	12.5	17.6	870	—	—	—
MPLFLN 2.5x*	0.08	10.7	72	106	25	8.8	220	25	10.6	220
MPLFLN 5x	0.15	20.0	36	51.5	50	4.4	59	50	5.3	59
MPLFLN 10x	0.30	11.0	18	68.1	100	2.2	15	100	2.7	15
MPLFLN 20x	0.45	3.1	9	70.4	200	1.1	5.2	200	1.3	5.1
MPLFLN 50x	0.80	1.0	3.6	89.9	500	0.44	1.3	500	0.53	1.3
MPLFLN 100x	0.90	1.0	1.8	90.9	1000	0.22	0.73	1000	0.27	0.73

Screw: W20.32x0.706 (0.8"x1/36")

Long WD M Plan SemiApochromat

(WD: Working Distance)

LMPLFLN series

Long working distance Plan SemiApochromat objective lenses, giving high-level correction for chromatic aberration.
Suitable with samples having a height difference and in preventing collision, as the working distance is long.
Also, since the exit pupil position of the 5x-100x objective lenses is standardized, the position of the DIC prism does not have to be switched when changing the magnification.

LMPLFLN5x

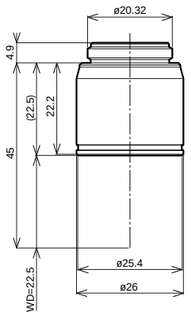

LMPLFLN10x

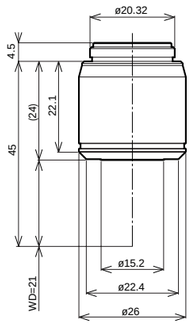

LMPLFLN20x

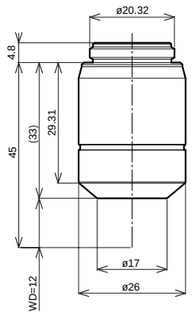

LMPLFLN50x

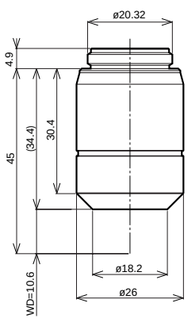

LMPLFLN100x

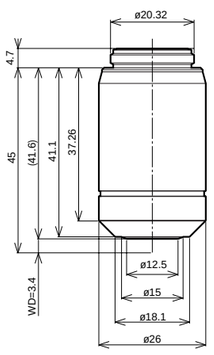

Unit: mm

UIS2 objective lenses					Widefield eyepiece WHN10x Field Number 22			Super widefield eyepiece SWH10x Field Number 26.5		
Objective lens (magnification)	Numerical Aperture	Working distance (mm)	Focal distance f (mm)	Weight (g)	Total magnifications	Practical field of view (mm)	Depth of focus (µm)	Total magnifications	Practical field of view (mm)	Depth of focus (µm)
LMPLFLN 5x	0.13	22.5	36	50	50	4.4	70	50	5.3	70
LMPLFLN 10x	0.25	21.0	18	54	100	2.2	18	100	2.7	18
LMPLFLN 20x	0.40	12.0	9	73	200	1.1	6.1	200	1.3	6.1
LMPLFLN 50x	0.50	10.6	3.6	77	500	0.44	2.5	500	0.53	2.5
LMPLFLN 100x	0.80	3.4	1.8	94	1000	0.22	0.87	1000	0.27	0.87

Screw: W20.32x0.706 (0.8"x1/36")

M Plan Achromat

MPLN series

Plan Achromat objective lenses providing excellent image flatness up to F.N. 22.

MPLN5x

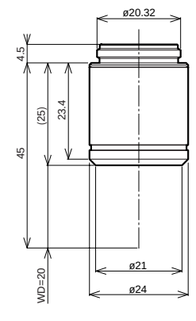

MPLN10x

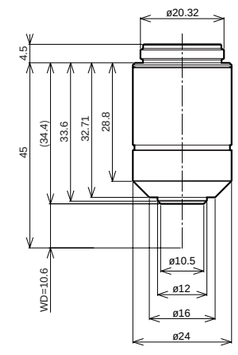

MPLN20x

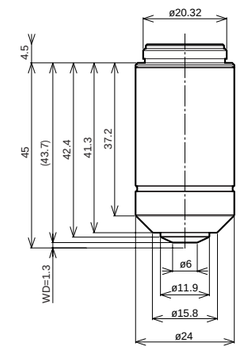

MPLN50x

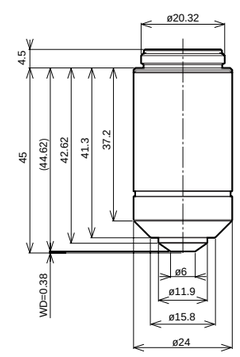

MPLN100x

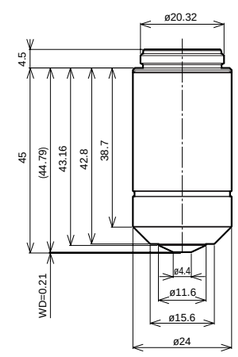

Unit: mm

UIS2 objective lenses					Widefield eyepiece WHN10x Field Number 22		
Objective lens (magnification)	Numerical Aperture	Working distance (mm)	Focal distance f (mm)	Weight (g)	Total magnifications	Practical field of view (mm)	Depth of focus (µm)
MPLN 5x	0.10	20.0	36	64	50	4.4	98
MPLN 10x	0.25	10.6	18	80	100	2.2	18
MPLN 20x	0.40	1.3	9	111	200	1.1	6.1
MPLN 50x	0.75	0.38	3.6	113	500	0.44	1.4
MPLN 100x	0.90	0.21	1.8	116	1000	0.22	0.73

Screw: W20.32x0.706 (0.8"x1/36")

LCD Long WD M Plan SemiApochromat

LCPLFLN-LCD series

Perfect objective lens series for observation of LCD panels and other samples through a glass substrate.
Aberration correction matched to the glass thickness is accomplished using a correction ring.

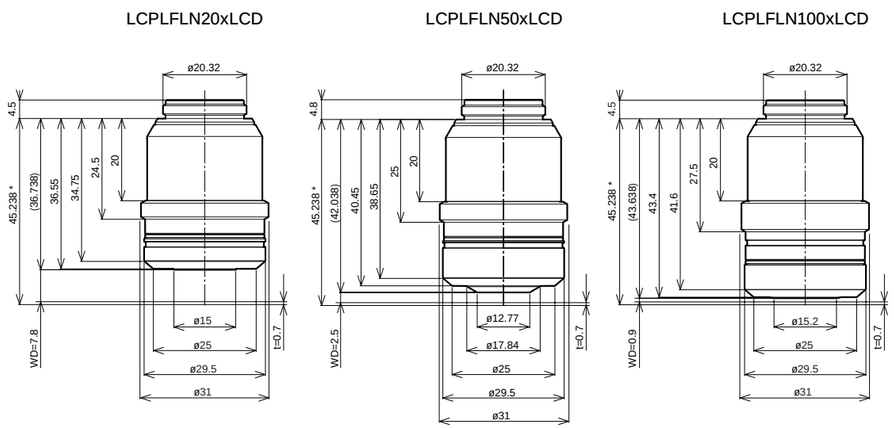

Unit: mm

* Value at glass thickness 0.7mm observation

Objective lens	LCPLFLN20xLCD			LCPLFLN50xLCD			LCPLFLN100xLCD		
Corresponding glass thickness (mm)	0-1.2			0-1.2			0-0.7		
Correction ring indication	0	0.7	1.2	0	0.7	1.2	0	0.5	0.7
Working distance (mm)	8.3	7.8	7.4	3.0	2.5	2.2	1.2	0.98	0.9
Correction system	Correction ring			Correction ring			Correction ring		

UIS2 objective lenses					Widefield eyepiece WHN10x Field Number 22			Super widefield eyepiece SWH10x Field Number 26.5		
Objective lens (magnification)	Numerical Aperture	Working distance** (mm)	Focal distance f (mm)	Weight (g)	Total magnifications	Practical field of view (mm)	Depth of focus (µm)	Total magnifications	Practical field of view (mm)	Depth of focus (µm)
LCPLFLN 20xLCD***	0.45	7.8	9	146	200	1.1	5.2	200	1.3	5.2
LCPLFLN 50xLCD***	0.70	2.5	3.6	170	500	0.44	1.6	500	0.53	1.6
LCPLFLN 100xLCD***	0.85	0.9	1.8	185	1000	0.22	0.79	1000	0.27	0.79

Screw: W20.32x0.706 (0.8"x1/36") **The figure shown here is the value when the correction ring indication is 0.7.

M Plan Apochromat

MPlanApo series

Highest class Plan Apochromat objective lens that maximize performance in brightfield observation.
All aberrations are corrected at the highest level, while providing high N.A.

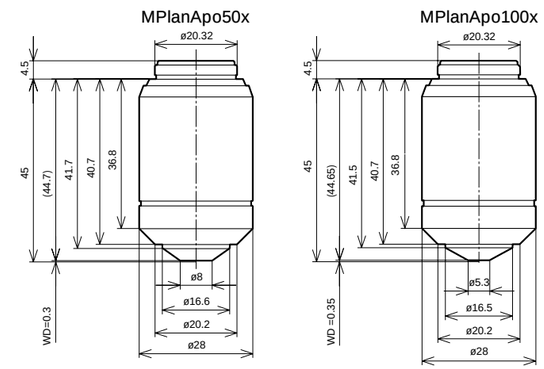

Unit: mm

UIS objective lenses					Widefield eyepiece WHN10x Field Number 22			Super widefield eyepiece SWH10x Field Number 26.5		
Objective lens (magnification)	Numerical Aperture	Working distance (mm)	Focal distance f (mm)	Weight (g)	Total magnifications	Practical field of view (mm)	Depth of focus (µm)	Total magnifications	Practical field of view (mm)	Depth of focus (µm)
MPlanApo 50x	0.95	0.3	3.6	150	500	0.44	1.0	500	0.53	1.0
MPlanApo 100x	0.95	0.35	1.8	150	1000	0.22	0.67	1000	0.27	0.67

Screw: W20.32x0.706 (0.8"x1/36")

Super Long WD M Plan Achromat

SLMPLN series

Plan Achromat objective lenses with high magnification and super long working distance.
Three magnifications, 20x, 50x and 100x are available. For 5x or 10x objective lenses, select from the LMPLFLN series.

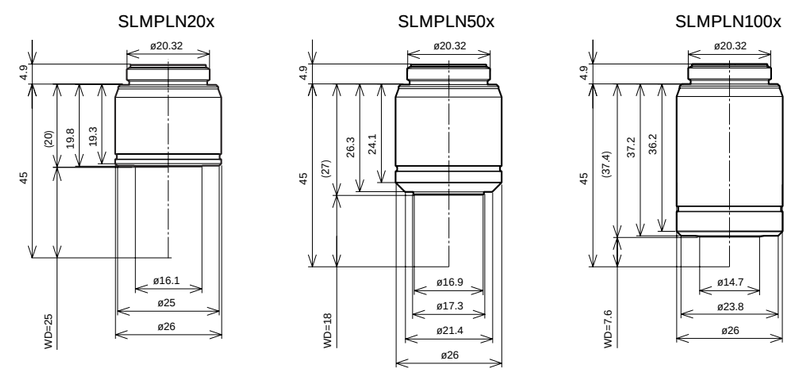

Unit: mm

UIS2 objective lenses					Widefield eyepiece WHN10x Field Number 22			Super widefield eyepiece SWH10x Field Number 26.5		
Objective lens (magnification)	Numerical Aperture	Working distance (mm)	Focal distance f (mm)	Weight (g)	Total magnifications	Practical field of view (mm)	Depth of focus (µm)	Total magnifications	Practical field of view (mm)	Depth of focus (µm)
SLMPLN 20x	0.25	25	9	56	200	1.1	11.4	200	1.3	11.4
SLMPLN 50x	0.35	18	3.6	74	500	0.44	4.2	500	0.53	4.2
SLMPLN 100x	0.6	7.6	1.8	100	1000	0.22	1.3	1000	0.27	1.3

Screw: W20.32x0.706 (0.8"x1/36")

IR Long WD M Plan Achromat/IR M Plan Achromat

LMPlan-IR series/MPlan-IR

IR objective lenses which compensate for aberrations from visible to near infrared light.
Ideal for the observations of semiconductor interiors and the back surface of a chip package as well as CSP bump inspection.

LMPlan5xIR

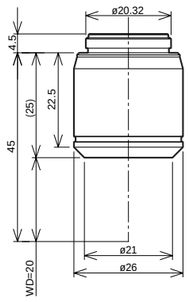

LMPlan10xIR

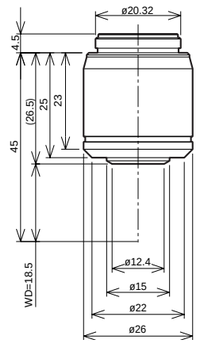

LMPlan20xIR

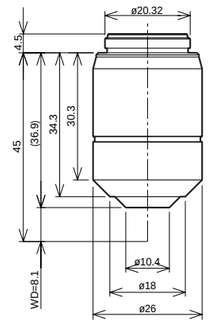

LMPlan50xIR

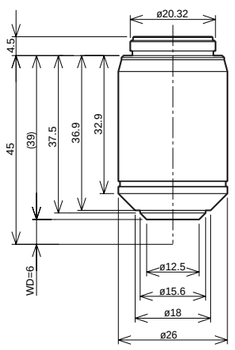

LMPlan100xIR

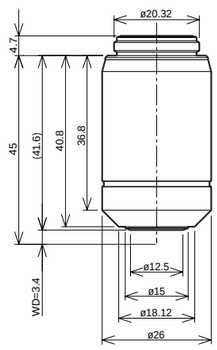

MPlan100xIR

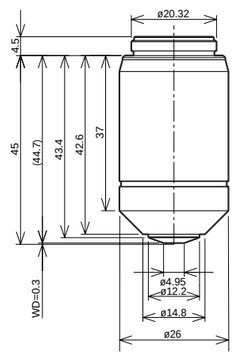

Unit: mm

UIS objective lenses					Widefield eyepiece WHN10x Field Number 22		
Objective lens (magnification)	Numerical Aperture	Working distance (mm)	Focal distance f (mm)	Weight (g)	Total magnifications	Practical field of view (mm)	Depth of focus (µm)
LMPlan 5xIR	0.10	20.0	36	73	50	4.4	98
LMPlan 10xIR	0.25	18.5	18	73	100	2.2	18
LMPlan 20xIR	0.40	8.1	9	110	200	1.1	6.1
LMPlan 50xIR	0.55	6.0	3.6	115	500	0.44	2.2
LMPlan 100xIR	0.80	3.4	1.8	122	1000	0.22	0.87
MPlan 100xIR	0.95	0.3	1.8	130	1000	0.22	0.67

Screw: W20.32x0.706 (0.8"x1/36")

M Plan SemiApochromat BD

(BD:Brightfield/Darkfield)

MPLFLN-BD series

Plan SemiApochromat objective lenses, giving high-level correction for chromatic aberration.
The series secures a W.D. of 1mm or longer. Since the exit pupil position of the 5x-150x objective lenses is standardized, the position of the DIC prism does not have to be switched when changing the magnification.

MPLFLN5xBD

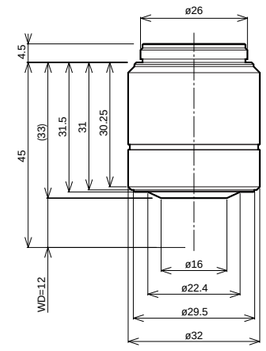

MPLFLN10xBD

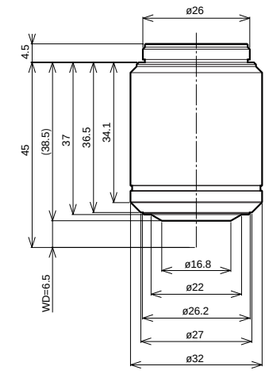

MPLFLN20xBD

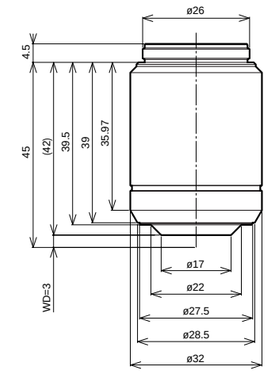

MPLFLN50xBD

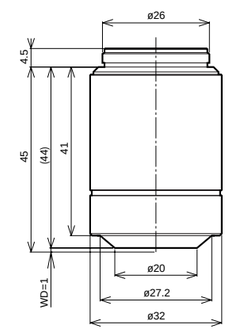

MPLFLN100xBD

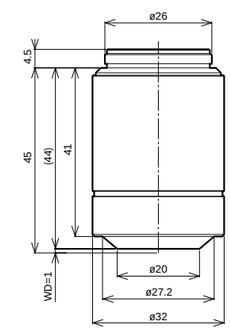

MPLFLN150xBD

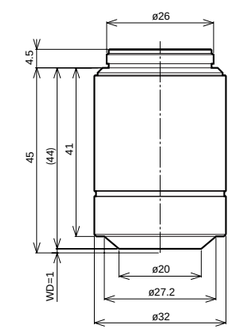

Unit: mm

UIS2 objective lenses					Widefield eyepiece WHN10x Field Number 22			Super widefield eyepiece SWH10x Field Number 26.5		
Objective lens (magnification)	Numerical Aperture	Working distance (mm)	Focal distance f (mm)	Weight (g)	Total magnifications	Practical field of view (mm)	Depth of focus (µm)	Total magnifications	Practical field of view (mm)	Depth of focus (µm)
MPLFLN 5xBD	0.15	12.0	36	95.5	50	4.4	59	50	5.3	59
MPLFLN 10xBD	0.30	6.5	18	82.8	100	2.2	15	100	2.7	15
MPLFLN 20xBD	0.45	3.0	9	87.7	200	1.1	5.2	200	1.3	5.2
MPLFLN 50xBD	0.80	1.0	3.6	99.8	500	0.44	1.3	500	0.53	1.3
MPLFLN 100xBD	0.90	1.0	1.8	98.9	1000	0.22	0.73	1000	0.27	0.73
MPLFLN 150xBD	0.90	1.0	1.2	104.8	1500	0.15	0.6	1500	0.18	0.6

Screw: W26x0.706

M Plan SemiApochromat BDP

(BDP:Brightfield/Darkfield/Polarizing)

MPLFLN-BDP series

Plan SemiApochromat objective lenses, giving high-level correction for chromatic aberration. The series secures a W.D. of 1mm or longer. Since the exit pupil position of the 5x-100x objective lenses is standardized, the position of the DIC prism does not have to be switched when changing the magnification. The BDP series optimizing brightfield/darkfield and polarized light characteristics is perfect for Nomarski DIC and polarized light observations

MPLFLN5xBDP

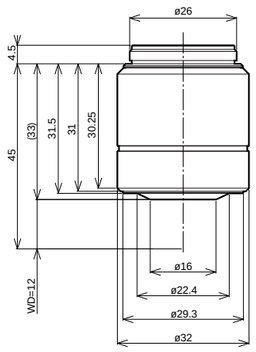

MPLFLN10xBDP

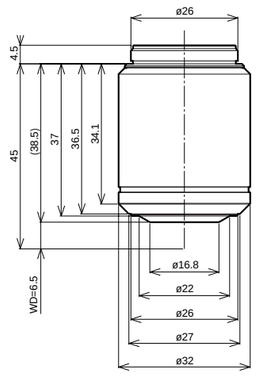

MPLFLN20xBDP

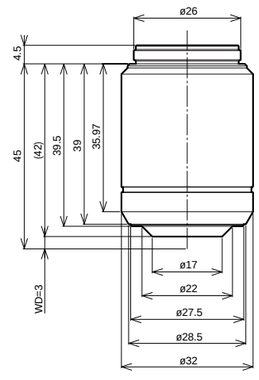

MPLFLN50xBDP

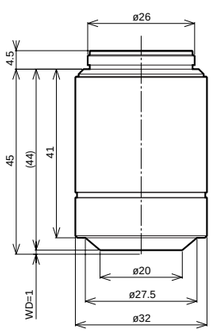

MPLFLN100xBDP

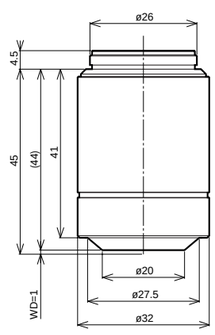

Unit: mm

UIS2 objective lenses					Widefield eyepiece WHN10x Field Number 22			Super widefield eyepiece SWH10x Field Number 26.5		
Objective lens (magnification)	Numerical Aperture	Working distance (mm)	Focal distance f (mm)	Weight (g)	Total magnifications	Practical field of view (mm)	Depth of focus (µm)	Total magnifications	Practical field of view (mm)	Depth of focus (µm)
MPLFLN 5xBDP	0.15	12.0	36	95.5	50	4.4	59	50	5.3	59
MPLFLN 10xBDP	0.25	6.5	18	83.3	100	2.2	18	100	2.7	18
MPLFLN 20xBDP	0.40	3.0	9	88.5	200	1.1	6.1	200	1.3	6.1
MPLFLN 50xBDP	0.75	1.0	3.6	100.5	500	0.44	1.4	500	0.53	1.4
MPLFLN 100xBDP	0.90	1.0	1.8	101.5	1000	0.22	0.73	1000	0.27	0.73

Screw: W26x0.706

Long WD M Plan SemiApochromat BD

LMPLFLN-BD series

Long working distance Plan SemiApochromat objective lenses, giving high-level correction for chromatic aberration. Suitable with samples having a height difference and in preventing collision, as the working distance is long. Also, since the exit pupil position of the 5x-100x objective lenses is standardized, the position of the DIC prism does not have to be switched when changing the magnification.

LMPLFLN5xBD

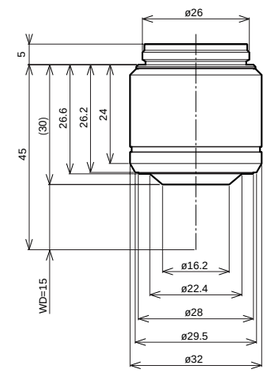

LMPLFLN10xBD

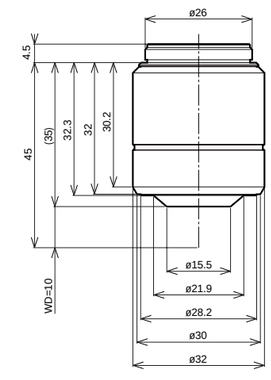

LMPLFLN20xBD

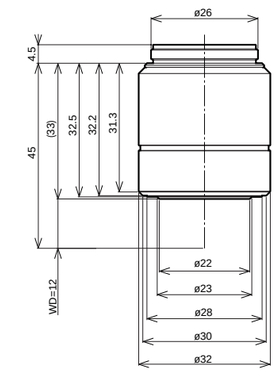

LMPLFLN50xBD

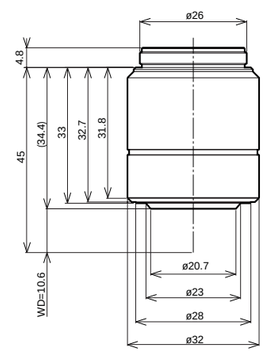

LMPLFLN100xBD

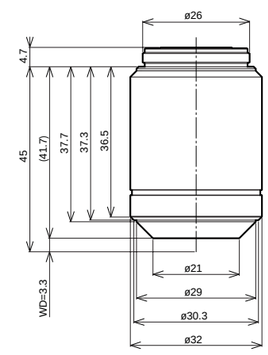

Unit: mm

UIS2 objective lenses					Widefield eyepiece WHN10x Field Number 22			Super widefield eyepiece SWH10x Field Number 26.5		
Objective lens (magnification)	Numerical Aperture	Working distance (mm)	Focal distance f (mm)	Weight (g)	Total magnifications	Practical field of view (mm)	Depth of focus (µm)	Total magnifications	Practical field of view (mm)	Depth of focus (µm)
LMPLFLN 5xBD	0.13	15.0	36	81	50	4.4	70	50	5.3	70
LMPLFLN 10xBD	0.25	10.0	18	84	100	2.2	18	100	2.7	18
LMPLFLN 20xBD	0.40	12.0	9	86	200	1.1	6.1	200	1.3	6.1
LMPLFLN 50xBD	0.50	10.6	3.6	85	500	0.44	2.5	500	0.53	2.5
LMPLFLN 100xBD	0.80	3.3	1.8	102	1000	0.22	0.87	1000	0.27	0.87

Screw: W26x0.706

M Plan Achromat BD

MPLN-BD series

Plan Achromat objective lenses providing excellent image flatness up to F.N. 22.

MPLN5xBD

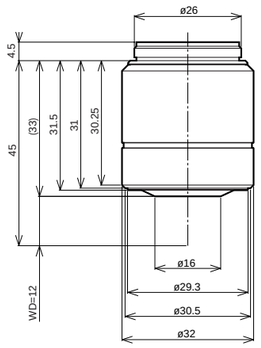

MPLN10xBD

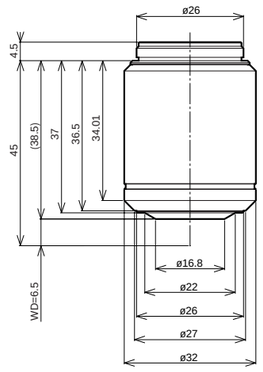

MPLN20xBD

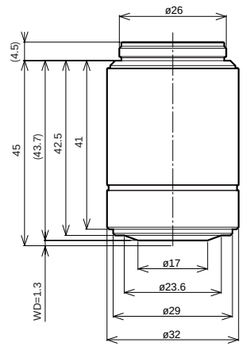

MPLN50xBD

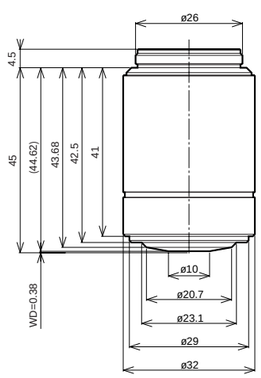

MPLN100xBD

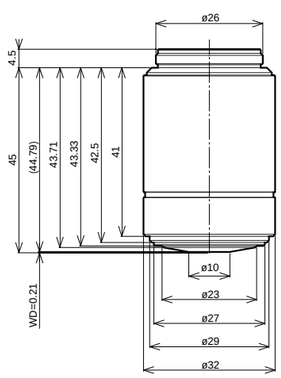

Unit: mm

UIS2 objective lenses					Widefield eyepiece WHN10x Field Number 22		
Objective lens (magnification)	Numerical Aperture	Working distance (mm)	Focal distance f (mm)	Weight (g)	Total magnifications	Practical field of view (mm)	Depth of focus (µm)
MPLN 5xBD	0.10	12.0	36	137	50	4.4	98
MPLN 10xBD	0.25	6.5	18	155	100	2.2	18
MPLN 20xBD	0.40	1.3	9	162	200	1.1	6.1
MPLN 50xBD	0.75	0.38	3.6	157	500	0.44	1.4
MPLN 100xBD	0.90	0.21	1.8	160	1000	0.22	0.73

Screw: W26x0.706

M Plan Apochromat BD

MPlanApo-BD

Highest class Plan Apochromat objective lens that maximize performance in brightfield and darkfield observations.
All aberrations are corrected at the highest level, while providing high N.A.

MPlanApo100xBD

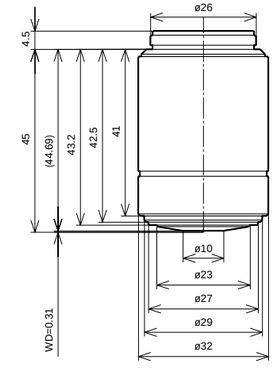

Unit: mm

UIS objective lenses					Widefield eyepiece WHN10x Field Number 22			Super widefield eyepiece SWH10x Field Number 26.5		
Objective lens (magnification)	Numerical Aperture	Working distance (mm)	Focal distance f (mm)	Weight (g)	Total magnifications	Practical field of view (mm)	Depth of focus (µm)	Total magnifications	Practical field of view (mm)	Depth of focus (µm)
MPlanApo100xBD	0.9	0.31	1.8	180	1000	0.22	0.59	1000	0.27	0.59

Screw: W26x0.706

BXFM frame

BXFM-F

Widely used system that allows use in combination with fiber illumination, motorized revolving nosepiece and telan lens unit.
Can easily be integrated into other equipment. Attach to the equipment by rear bolt mounting screw or pillar mounting hole.

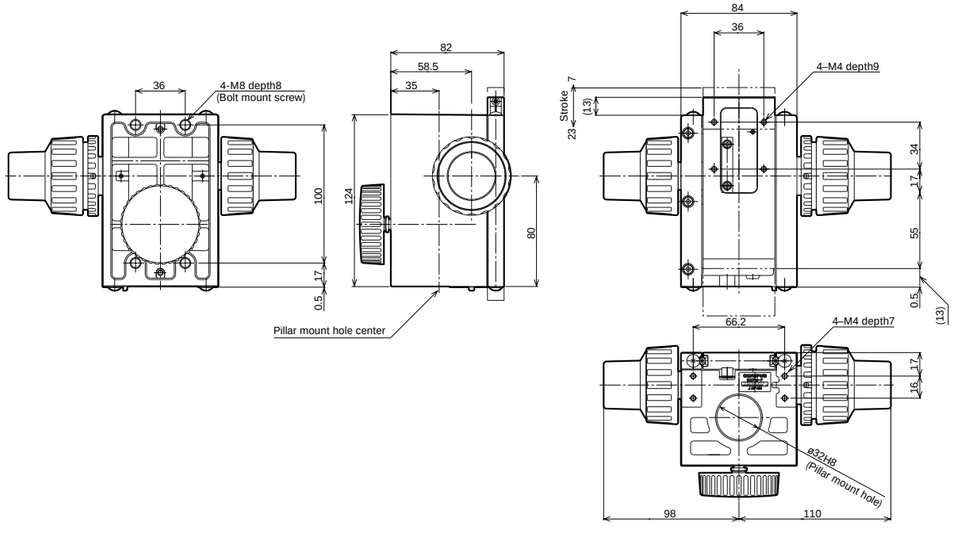

Weight: 1.9kg Unit: mm

BXFM

BXFM-F+BXFM-ILH+BXFM-ILHSPU

Accommodates the reflected light brightfield/darkfield and fluorescence illuminators.

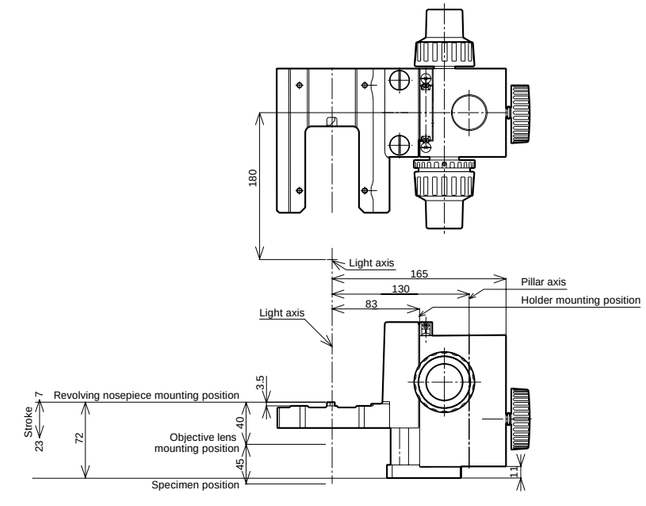

Weight: 3.2kg Unit: mm

BXFM combination sample
BXFM-F+BXFM-ILH+BXFM-ILHSPU+TR30-2+BX-RLA2+U-LH100L-3

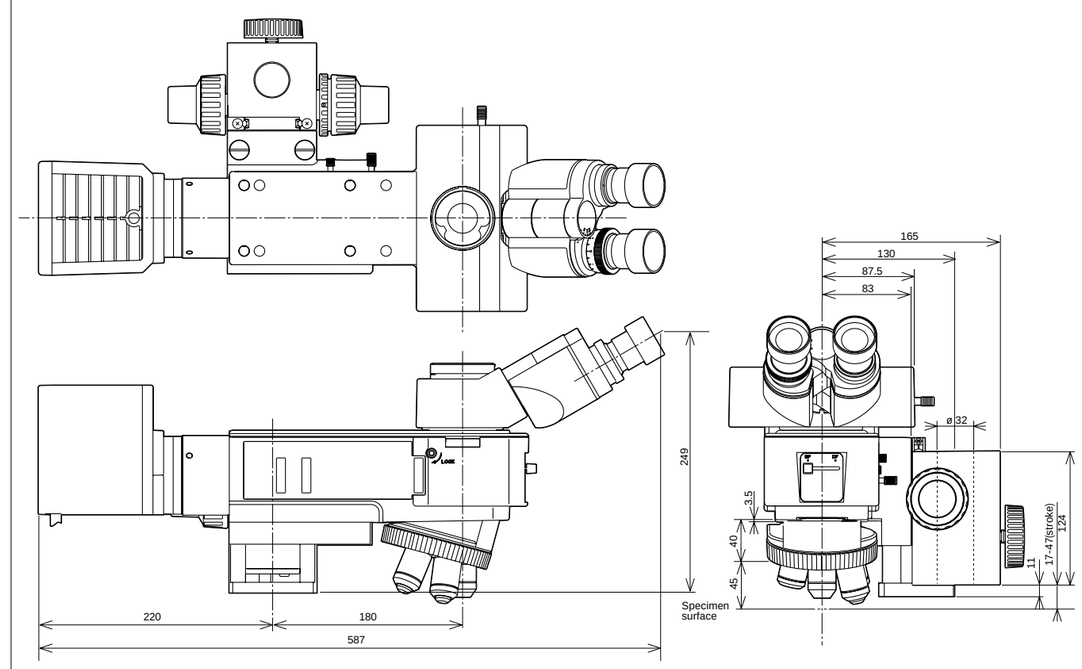

* For installation dimensions, refer to those for the BXFM-F (page 19).

Weight: 8.2kg (exclude objective lens) Unit: mm

BXFM-S

BXFM-F+BXFM-ILHS

Compact focusing unit suitable for building into existing equipment.

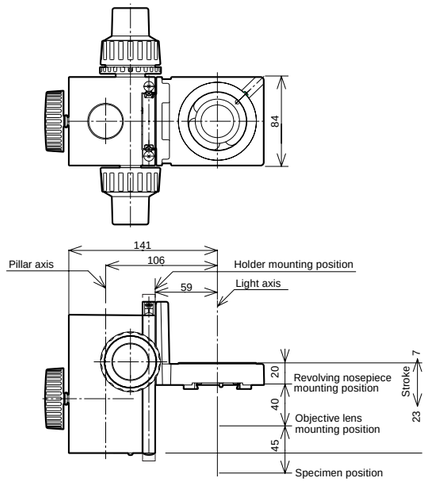

Weight: 2.4kg

Unit: mm

BXFM-S combination sample
BXFM-F+BXFM-ILHS+TR30-2+U-KMAS+U-LH100L-3

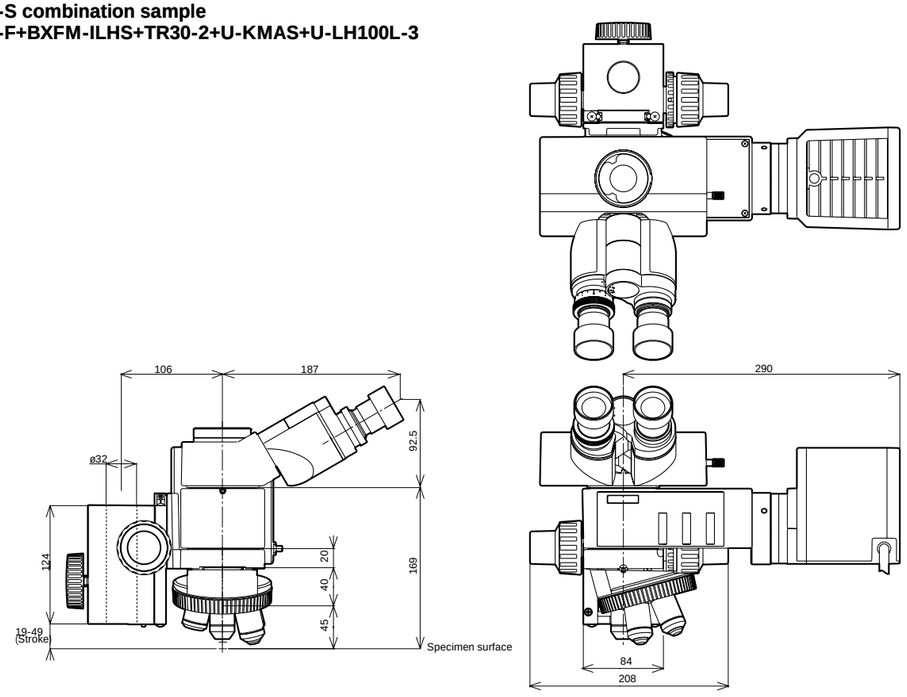

* For installation dimensions, refer to those for the BXFM-F (page 19).

Weight: 5.5kg (exclude objective lens)

Unit: mm

Stands

A wide variety of stands are available to suit different applications and purposes.

SZ2-STU2
Universal stand type 2

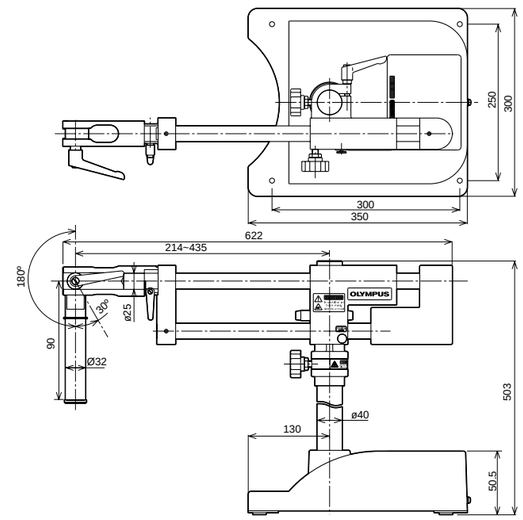

Major specifications

	Item	Specifications
1	Diameter of focusing arm or fixing section of tube	ø32mm
2	Vertical pole diameter	ø40mm
3	Horizontal poles diameters	ø25mm (both upper and lower poles)
4	Stroke	Horizontal: 234mm, Vertical: 205mm
5	Movement range	Horizontal: 541 (435+106) mm max. (Vertical pole — BXFM-S optical axis)
6	Maximum specimen weight	Forward: 10kg (within 90-degree area) Transverse direction: 6kg Backward direction: 7kg (at maximum stroke)
7	Weight	30kg

* The rotation angle of the horizontal arm can restrict to 90 degrees with stopper.

U-ST
Compact stand

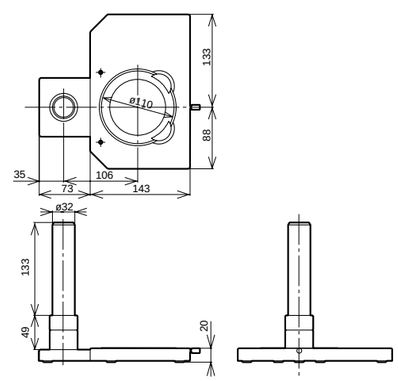

Weight: 1.8kg

SZ-STL
Large stand

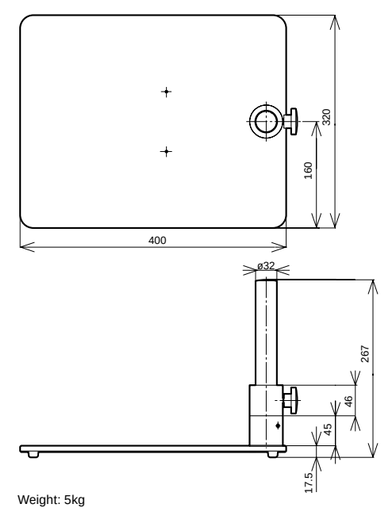

Weight: 5kg

Unit: mm

Reflected light illuminator for BF/DF

BX-RLA2

ND filters are linked when exchanging between brightfield and darkfield.

Accessories

Unit name	Description	Weight (g)
U-25LBD	LBD filter slider	20
U-25IF550	IF550 filter slider	20
U-25ND6	ND filter	20
U-25ND25	ND filter	20
U-25FR	Frost filter slider	20
U-25L42	UV-cut filter	20
U-PO3	Polarizer slider for reflected light	71
U-POTP3	Polarizer slider for reflected light with tint plate	71
U-AN360-3	360° rotatable analyzer slider	79
U-AN	Analyzer slider for reflected light	50
U-DICR	DIC slider for reflected light	130
U-DICRH	DIC slider for reflected light (high resolution type)	130
U-DICRHC	DIC slider for reflected light (high contrast type)	130

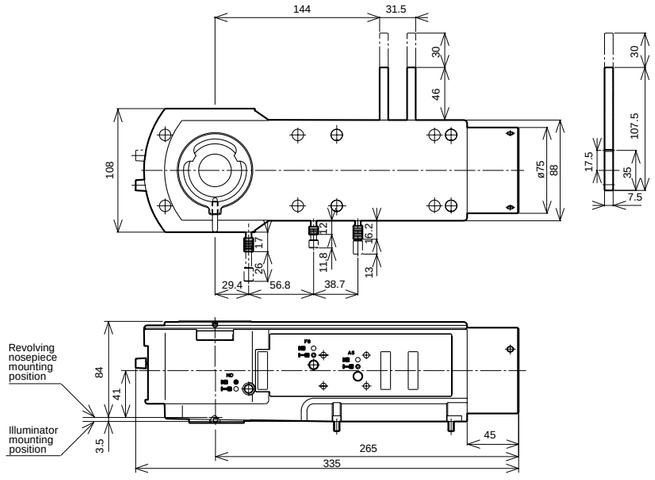

Weight: 3.4kg

Universal reflected light illuminator

BX-URA2

Suitable for observations ranging from brightfield to fluorescence.
Six mirror units can be attached to this reflected light illuminator simultaneously.

Accessories

Unit name	Description	Weight (g)
U-25LBD	LBD filter slider	20
U-25IF550	IF550 filter slider	20
U-25ND6	ND filter	20
U-25ND25	ND filter	20
U-25FR	Frost filter slider	20
U-25L42	UV-cut filter	20
U-PO3	Polarizer slider for reflected light	71
U-POTP3	Polarizer slider for reflected light with tint plate	71
U-AN360-3	360° rotatable analyzer slider	79
U-AN	Analyzer slider for reflected light	50
U-DICR	DIC slider for reflected light	130
U-DICRH	DIC slider for reflected light (high resolution type)	130
U-DICRHC	DIC slider for reflected light (high contrast type)	130
U-MBF3	Mirror unit for reflected brightfield	80
U-MDF3*	Mirror unit for reflected darkfield	80
U-MDIC3	Mirror unit for reflected DIC	80
U-MBFL3	Mirror unit for reflected brightfield, for high intensity light source	80
U-MWUS3	Fluorescence mirror unit for reflected (U excitation)	80
U-MWBS3	Fluorescence mirror unit for reflected (B excitation)	80
U-MWGS3	Fluorescence mirror unit for reflected (G excitation)	80

* U-RCV (DF converter for BX-URA2) is needed with darkfield observation.

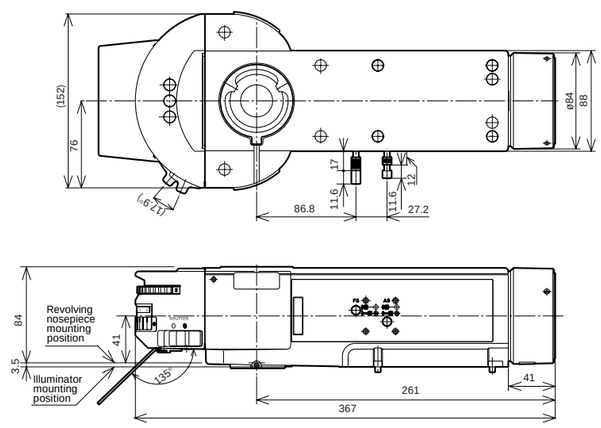

Weight: 3.8kg

Unit: mm

Reflected light illuminators for BF

BX-KMA/BX-KMA-ESD

Enables brightfield, Nomarski DIC and simple polarizing observations. ESD model is also available.

Accessories

Unit name	Description	Weight (g)
U-25LBD	LBD filter slider	20
U-25IF550	IF550 filter slider	20
U-25ND6	ND filter	20
U-25ND25	ND filter	20
U-25FR	Frost filter slider	20
U-25L42	UV-cut filter	20
U-PO3	Polarizer slider for reflected light	71
U-POTP3	Polarizer slider for reflected light with tint plate	71
U-AN360-3	360° rotatable analyzer slider	79
U-AN	Analyzer slider for reflected light	50
U-DICR	DIC slider for reflected light	130
U-DICRH	DIC slider for reflected light (high resolution type)	130
U-DICRHC	DIC slider for reflected light (high contrast type)	130

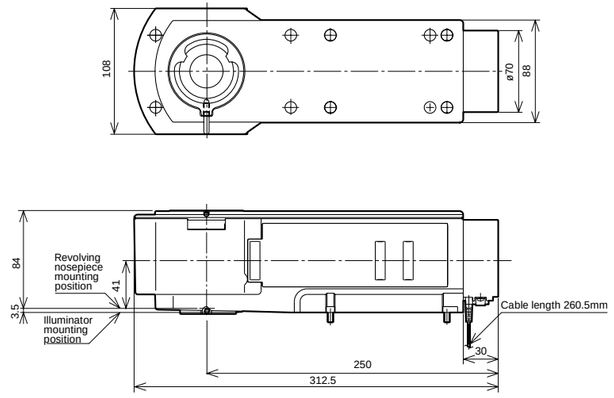

* Combine SZX-TLGAD when using fiber illumination.

Weight: 3.1kg

Unit: mm

MOUNTING DIMENSIONS OF ILLUMINATORS (BX-RLA2, BX-URA2 and BX-KMA/BX-KMA-ESD)

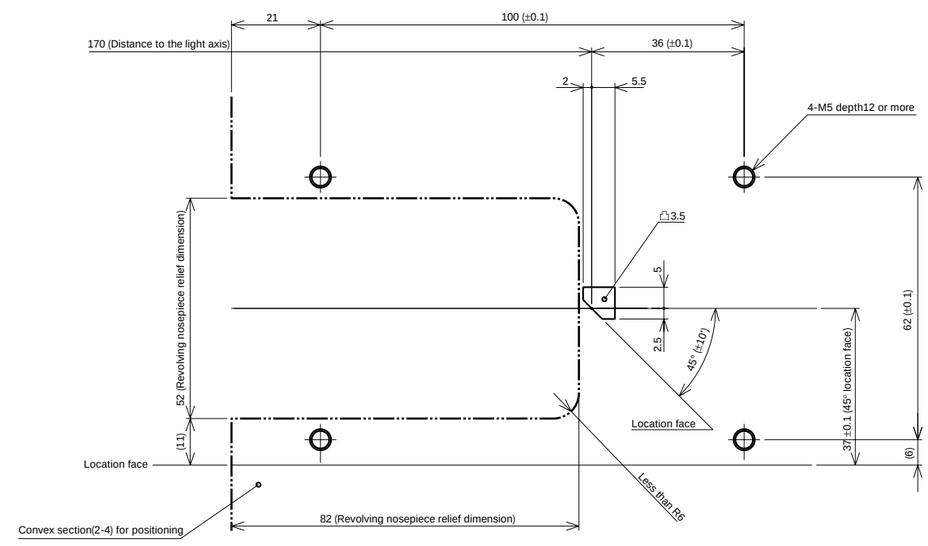

Fix illuminator using four M5 screws and projection for fastening.

Unit: mm

Reflected light illuminator for BF

U-KMAS

Very compact reflected light illuminator with reduced depth.

Accessories

Unit name	Description	Weight (g)
U-25LBD	LBD filter slider	20
U-25IF550	IF550 filter slider	20
U-25ND6	ND filter	20
U-25ND25	ND filter	20
U-25FR	Frost filter slider	20
U-25L42	UV-cut filter	20
U-PO3	Polarizer slider for reflected light	71
U-POTP3	Polarizer slider for reflected light with tint plate	71
U-AN360-3	360° rotatable analyzer slider	79
U-AN	Analyzer slider for reflected light	50
U-DICR	DIC slider for reflected light	130
U-DICRH	DIC slider for reflected light (high resolution type)	130
U-DICRHC	DIC slider for reflected light (high contrast type)	130

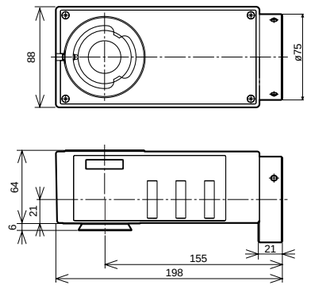

Weight: 1.2kg

Unit: mm

LAMP HOUSING & ACCESSORIES

Lamp housings

Various different lamp housings are available, for use with different light sources: choose to suit the intended purpose.

U-LH75XEAPO
75W xenon apo lamp housing

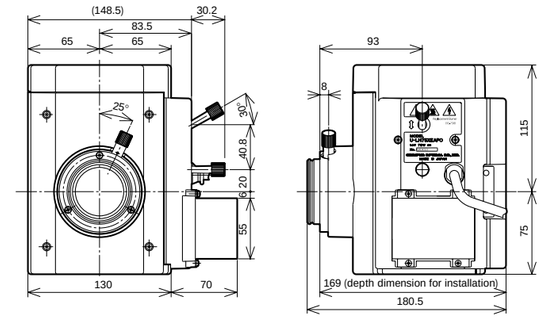

Cable length 2,000mm Accepted lamp: UXL-75XB Weight: 3.1kg

*Power supply unit (U-RX-T200) and power cable (UYCP) are necessary for 75W xenon lamp housing. These items are sold separately.
U-RX-T200 dimensions: 115(W)x195(D)x260(H), weight approx. 3kg

U-LH100HGAPO
100W mercury apo lamp housing
U-LH100HG
100W mercury lamp housing

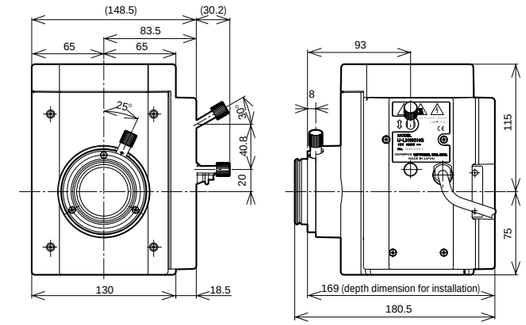

Cable length 2,000mm Accepted lamp: USH-103OL Weight: 2.7kg

* Power supply unit (U-RFL-T200) and power cable (UYCP) are necessary for 100W mercury lamp housings. These items are sold separately.
U-RFL-T200 dimensions: 150(W)x295(D)x200(H), weight approx. 4.8kg

U-LH100-3/U-LH100IR/U-LH100L-3
100W halogen lamp housings

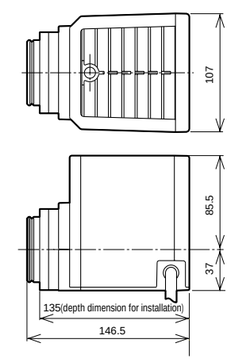

Cable length U-LH100-3: 290mm
U-LH100IR: 290mm
U-LH100L-3: 800mm

Weight: 880g

Accepted lamp: 12V100WHAL (high intensity lamp)
12V100WHAL-L (long life lamp)

* External power supply (TH4-100 or TH4-200) and power cable (UYCP) are necessary for 100W halogen lamp housings. These items are sold separately. For TH4-100/200 installation dimensions, refer to the next page.

Unit: mm

LAMP HOUSING & ACCESSORIES

Lamp housing accessories

For the 100W halogen lamp, the external power supply TH4-100/200 with an intensity adjustment switch and an ON/OFF switch, both are located close to the operator's hand, are provided. All Olympus reflected light illuminators can be used with fiber illumination.

TH4-100/200
External power supply

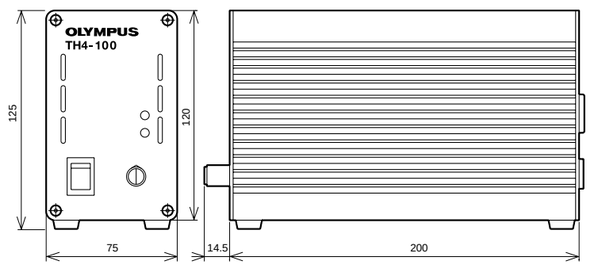

Weight: 2.2kg

TH4-HS
Hand switch

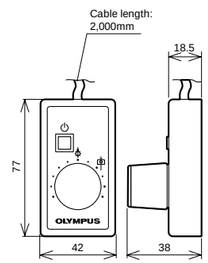

Weight: 140g

LG-PS2*
Light source

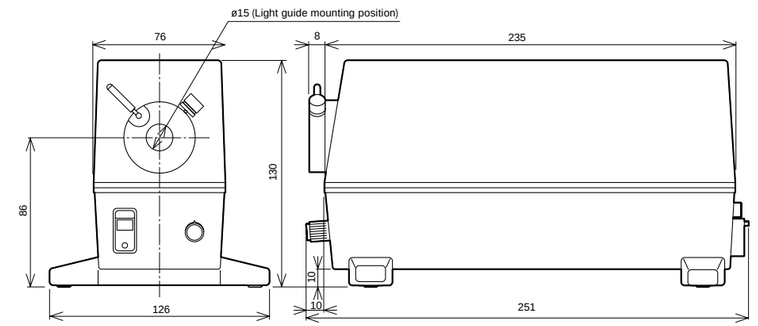

*The types of model varies by country in use.

Weight: 1.6kg

LG-SF
Light guide

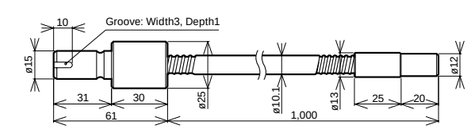

Weight: 210g

U-RMT
Extension cord

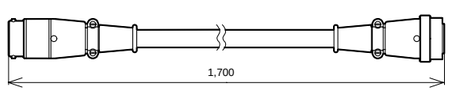

Weight:200 g

U-RCV
DF converter for BX-URA2

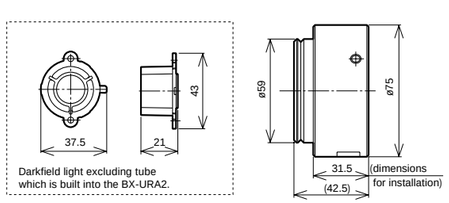

Weight: 315g

U-LGAD
Fiber adapter for reflected light observation

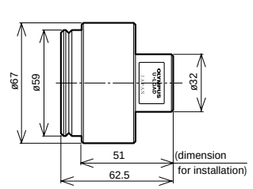

Light guide mount hole ø12
Weight: 390g

SZX-TLGAD
Transmitted light guide adapter

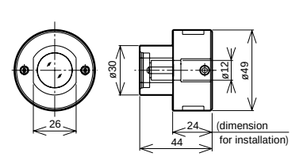

* Mountable with BX-KMA/BX-KMA-ESD only.

Light guide mount hole ø12
Weight: 135g

U-DULHA
Double lamp house adapter

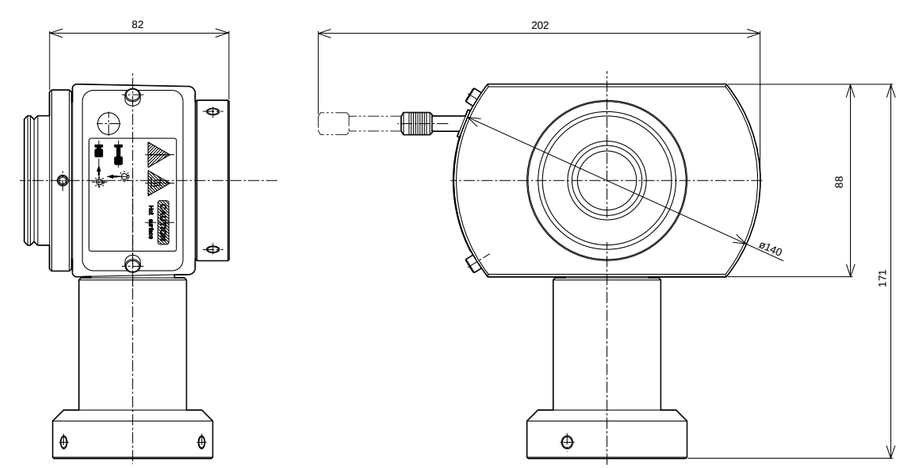

Weight: 1.2kg

Unit: mm

Widefield trinocular observation tubes

Trinocular observation tubes with widefield of view. Compatible with F.N. 22.

U-TR30-2/
Widefield trinocular tube
U-TR30IR
Widefield trinocular tube for IR

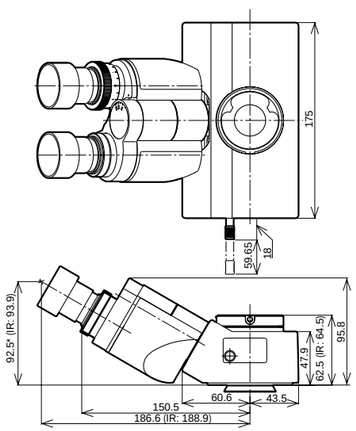

U-ETR-4
Widefield erect image trinocular tube

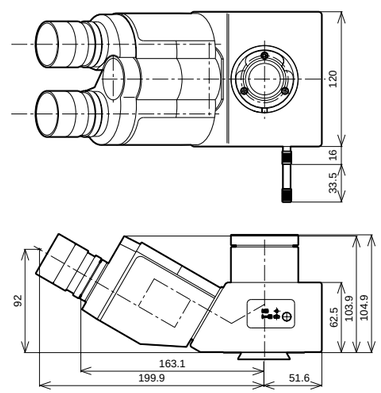

Unit: mm

Name	Field Number (F.N.)	Inclination angle (degree)	Interpupillary distance (mm)	Light path selector (eyepiece/video port)	Observation image	Weight (g)
U-TR30-2	22	30	50-76	100/0, 20/80, 0/100	Inverted	1600
U-TR30IR	22	30	50-76	100/0, 0/100	Inverted	1600
U-ETR-4	22	30	50-76	100/0, 0/100	Erect	1900

*Length marked with an asterisk (*) may vary according to interpupillary distance. The distance for figure shown is 62mm.

Single port tube with lens

When the visual observation is not needed and only video observation is required, a single port tube with a built-in telan lens can be attached directly to the video port.

U-TLU
Single port tube with lens
U-TLUIR
Single port tube with lens for IR

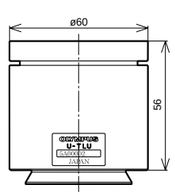

Weight: 350g

• For attachable video camera adapters, refer to video camera adapters system diagram page (pages 5-6).

Unit: mm

Super widefield trinocular observation tubes

Trinocular observation tubes with super widefield of view. Compatible with F.N. 26.5.

U-SWTR-3
Super widefield trinocular tube

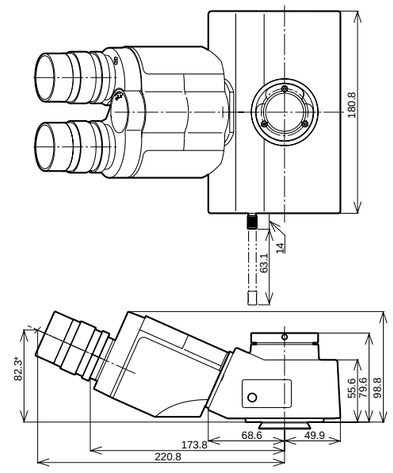

U-SWETR
Super widefield erect image trinocular tube

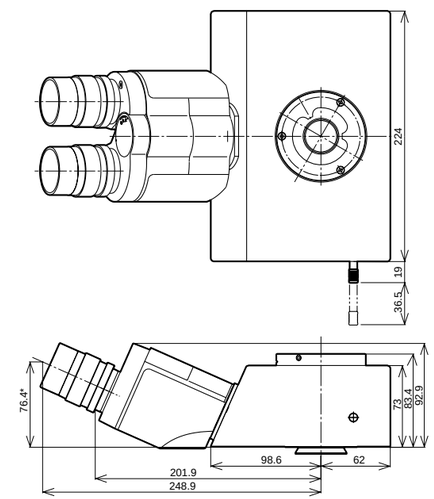

MX-SWETTR
Super widefield erect image tilting trinocular tube

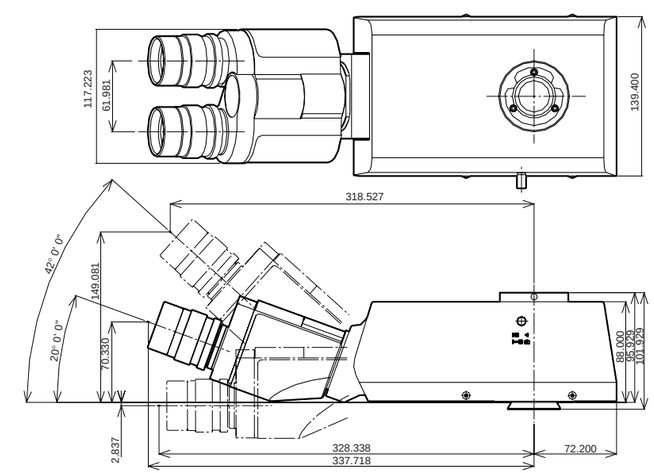

Unit: mm

Name	Field Number (F.N.)	Inclination angle (degree)	Interpupillary distance (mm)	Light path selector (eyepiece/video port)	Observation image	Weight (g)
U-SWTR-3	26.5	24	50-76	100/0, 20/80, 0/100	Inverted	2300
U-SWETR	26.5	24	50-76	100/0, 0/100	Erect	4200
MX-SWETTR	26.5	0-42	50-76	100/0, 0/100	Erect	4200

*Length marked with an asterisk (*) may vary according to interpupillary distance. The distance for figure shown is 62mm.

INTERMEDIATE TUBES & ACCESSORIES

Intermediate tubes

Various accessories for various observation need.

U-CA
Magnification changer

Provides 1x, 1.2x, 1.6x and 2x intermediate magnifications.

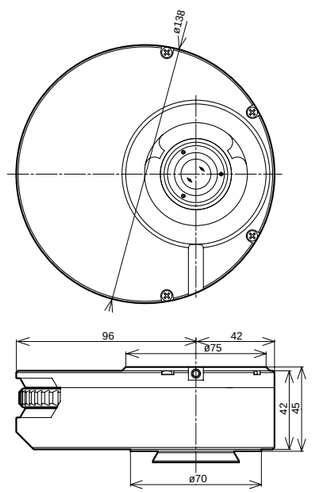

Weight: 1.3kg

U-ECA
Magnification changer 2x

Provides 1x and 2x intermediate magnifications.

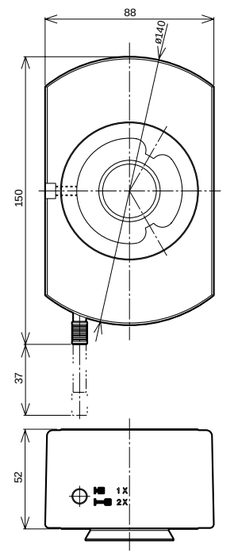

Weight: 1.3kg

U-DP
Dual port

Use this intermediate tube to divide the light path.

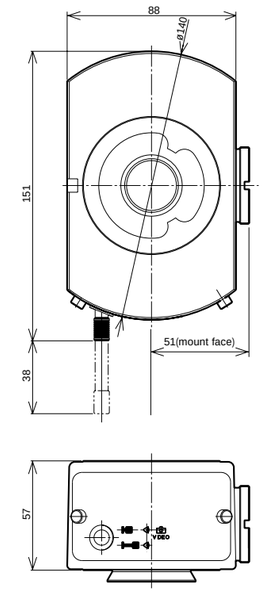

Weight: 1kg

Light path selector by mirror unit

Transmitted side port: side port = 100:0

Transmitted side port: side port = 70:30 (with use of U-MBF3)

U-DP1xC
Dual port 1x

Combine with U-DP to obtain a 1x image.

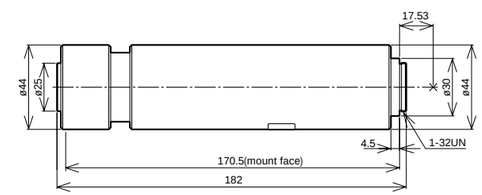

Weight: 500g

U-TRU
Trinocular intermediate attachment

Intermediate attachment which divides the light path, allowing attachment of both digital and video cameras.

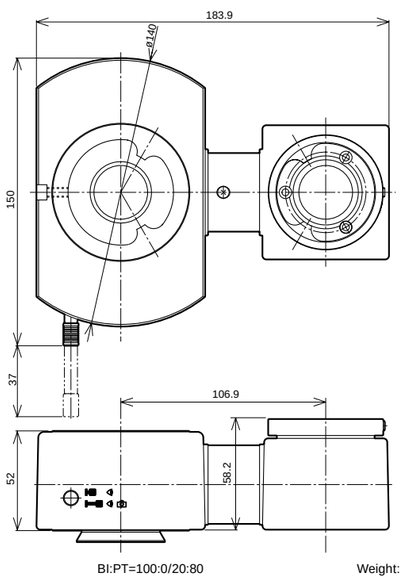

BI:PT=100:0/20:80

Weight: 1.3kg

U-EPA2
Eyepoint adjuster

Raises eyepoint by 30mm.

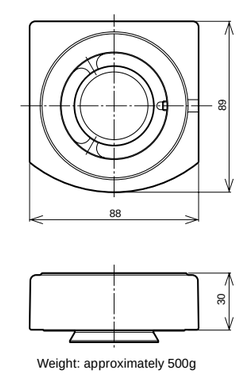

Weight: approximately 500g

U-APT
Arrow pointer

Projects an arrow into the field of view.

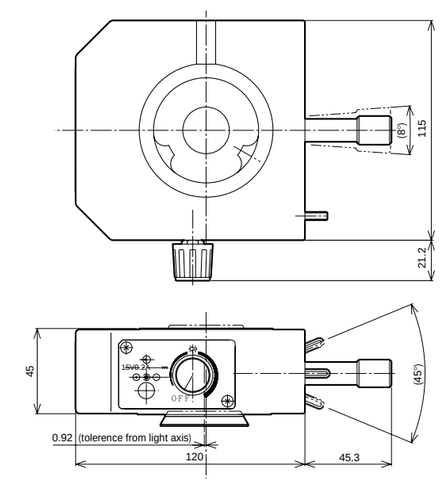

Weight: 1.2kg

Unit: mm

Unit: mm

Eyepieces

Eyepieces for UIS2 optical system.

WHN10x
Widefield eyepiece

WHN10x-H
CROSSWHN10x
Widefield eyepieces

WH15x
Widefield eyepiece

SWH10x-H
MICROSWH10x
CROSSSWH10x
Super widefield eyepieces

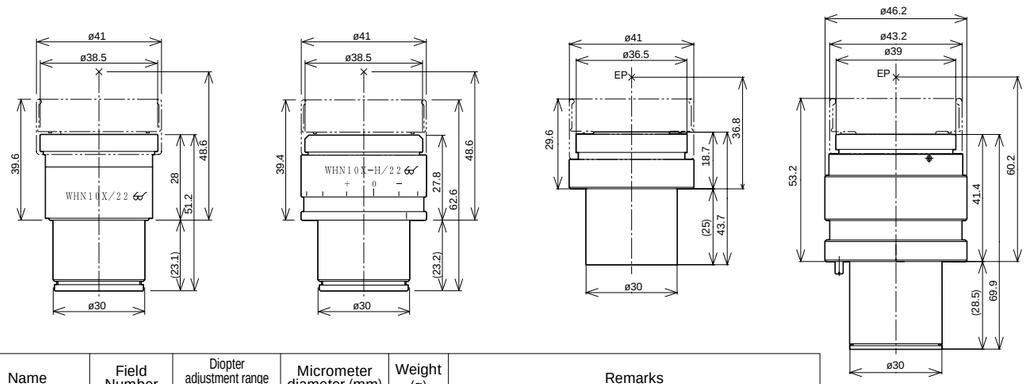

Name	Field Number	Diopter adjustment range (1/m)	Micrometer diameter (mm)	Weight (g)	Remarks
WHN10x	22	—	24	90	
WHN10x-H	22	-8 — +5	24	170	With adjustable diopter
CROSSWHN10x	22	-8 — +5	—	170	With cross lines and adjustable diopter
WH15x	14	—	24	90	
SWH10x-H	26.5	-8 — +2	—	210	With adjustable diopter
MICROSWH10x	26.5	-8 — +2	—	210	With micrometer and adjustable diopter
CROSSSWH10x	26.5	-8 — +2	—	210	With cross lines and adjustable diopter

Unit: mm

*EP=eyepoint

Filar micrometer eyepiece

U-OSM

Used for precise measurement in the field of view.

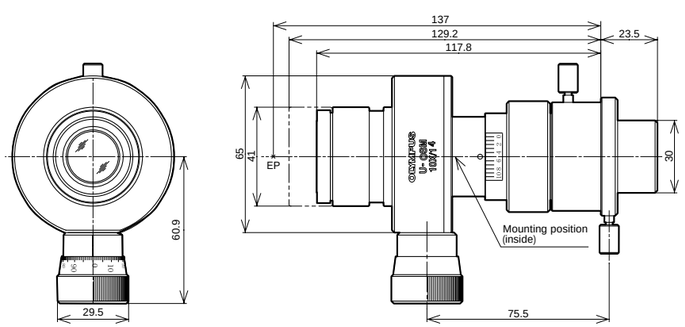

Weight: 580g

Eyepiece	Magnification 10×, erect image (inverted when used with erect image observation tube), F.N. 14. Diopter adjustment range: ±5 1/m. Provided with rubber eye shade.
Measuring scale	Scale lines graduated in increments of 1mm in the entire 10mm length. Shift of scale lines: 1mm per rotation of the shift ring, the circumference of which is divided into 100 graduations.
Measuring range	10mm/objective lens magnification
Compensation limit for objective lens magnification tolerance	±5% by combined use of the zoom compensation ring and the provided stage micrometer. Compensation ring clamping screw. Magnification compensation scale.
Actual size	Actual size (mm) = $\frac{\text{Measured value (mm)}}{\text{Objective lens magnification}}$
Repeatability	Repeatability error $\pm\frac{0.007}{A}$ mm (A … Objective lens magnification)
Accuracy	*Measuring error (A … Objective lens magnification: L … Measured length in mm) $\pm[(0.0002 \times A+0.002)\,L+\frac{0.007}{A}]$ mm

Unit: mm

Revolving nosepieces for BF objective lenses

Choose from following 6 types. For motorized nosepieces, refer to motorized unit page.

U-5RE-2
Quintuple revolving nosepiece

U-D6RE
Sextuple revolving nosepiece with slider slot for DIC
U-D6RE-ESD
Sextuple revolving nosepiece with slider slot for DIC with ESD treatment

U-D7RE
Septuple revolving nosepiece with slider slot for DIC

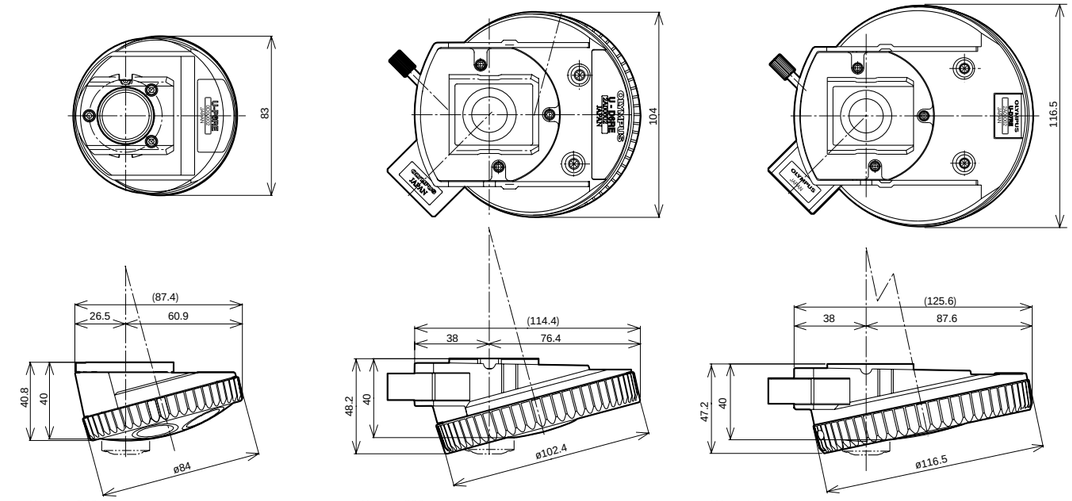

Weight: 520g

Weight: 800g

Weight: 980g

U-P4RE
Centerable quadruple revolving nosepiece with slider slot for DIC

U-P6RE
Centerable sextuple revolving nosepiece with slider slot for DIC

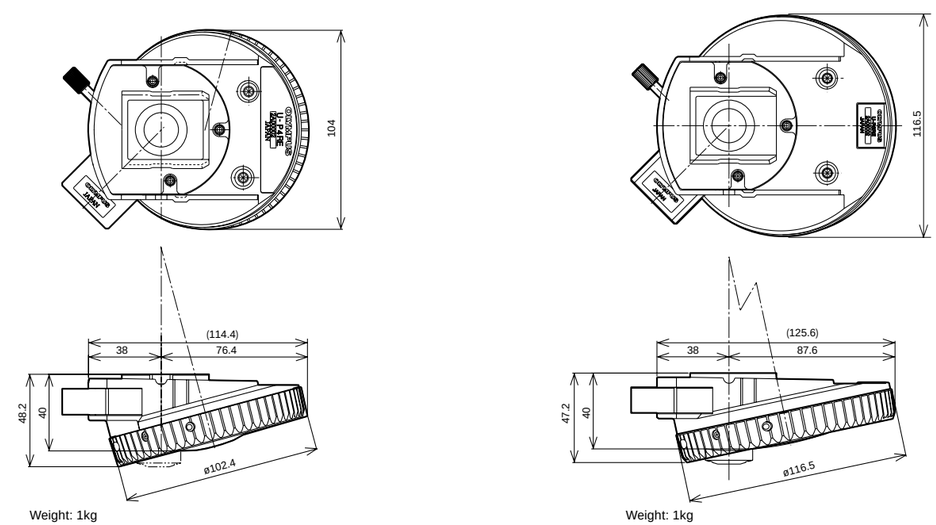

Weight: 1kg

Weight: 1kg

Insert the DIC dummy when not using the DIC slider

Unit: mm

Revolving nosepieces for BF/DF objective lenses

Choose from following 3 types. Use of adapter to mount BF objectives (BD-M-AD) enables attachment of brightfield objective lenses. For motorized nosepieces, refer to motorized unit page.

U-5BDRE
Quintuple revolving nosepiece for BF/DF

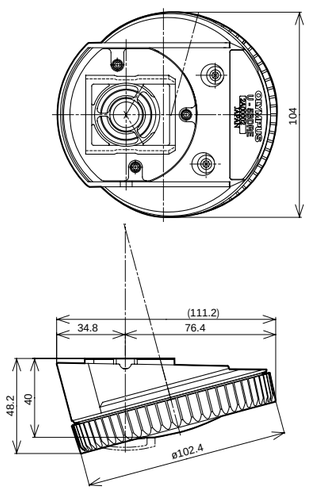

Weight: 800g

U-D5BDRE
Quintuple revolving nosepiece for BF/DF with slider slot for DIC

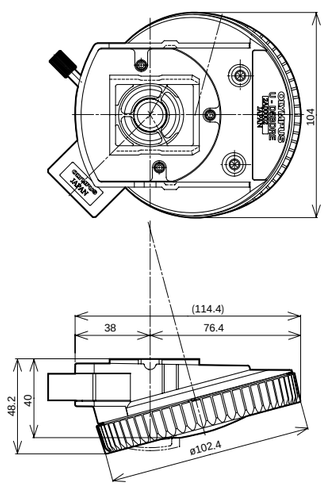

Weight: 800g

U-D6BDRE
Sextuple revolving nosepiece for BF/DF with slider slot for DIC/
U-P5BDRE
Centerable quintuple revolving nosepiece

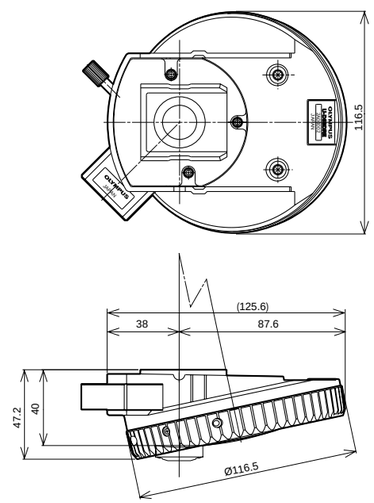

Weight: 1kg
Insert the DIC dummy when not using the DIC slider

BD-M-AD
Adapter to mount BF objectives

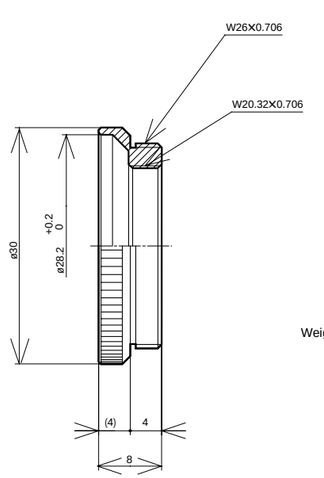

Weight: 10g

Unit: mm

C-mount video camera ports

Allows direct attachment of a C mount video camera. Four types are provided: 0.63x, 0.5x, 0.35x and 0.25x.
All models feature a focus adjustment function

U-TV0.25xC
C-mount video port with 0.25x lens

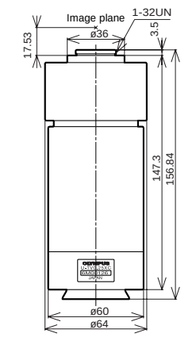

Weight: 1.2kg

U-TV0.35xC-2
C-mount video port with 0.35x lens

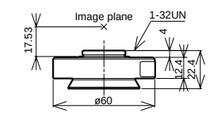

Weight: 100g

U-TV0.5xC-3
C-mount video port with 0.5x lens

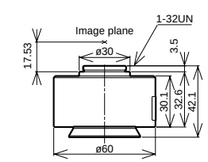

Weight: 200g

U-TV0.63xC
C-mount video port with 0.63x lens

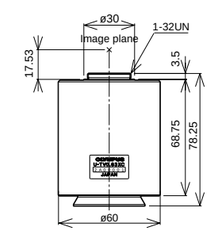

Weight: 430g

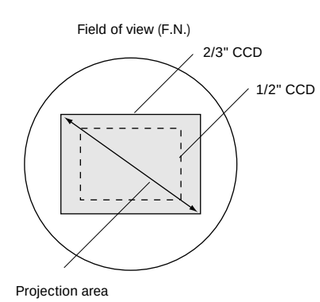

Unit: mm

]Video camera adapter (Projection lens)	Projection magnifications	Projection area (F.N.)		
		2/3" CCD	1/2" CCD	1/3" CCD
U-TV1x-2	1x	11	8	6
U-TV0.63xC	0.63x	17.5	12.7	9.5
U-TV0.5xC-3	0.5x	22	16	12
U-TV0.35xC-2	0.35x	—	22	17.1
U-TV0.25xC	0.25x	—	—	24

$$\text{Practical field of view (mm)} = \frac{\text{Projection area (Field Number)}}{\text{Objective lens magnifications}}$$

Focus the video camera adapter to prevent defocusing the eyepiece image and defocusing by magnification switching.
Generally, the video camera adapter is focused by switching to a low magnification after focusing at a high magnification.objective lens.

Video camera mount adapters

Allows attachment to video cameras with C, Bayonet, Sony and F mounts.
Use with the U-TV1x-2. Focus by amount of screwing into U-TV1x-2.

U-CMAD3
C-mount adapter

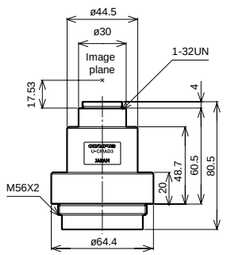

Weight: 165g

U-BMAD
Bayonet mount adapter

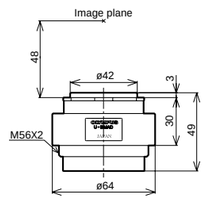

Weight: 80g

U-SMAD
Sony mount adapter

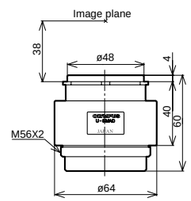

Weight: 90g

U-TMAD
T mount adapter

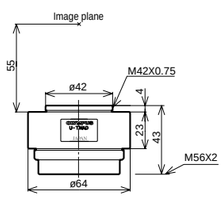

Weight: 70g

U-FMT
F/T mount adapter *

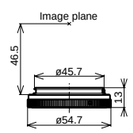

Weight: 30g

* It must be combined with U-TMAD

Unit: mm

Video camera port

This port can be attached directly to the trinocular observation tube as well as to the single port tube with lens.

U-TV1x-2
Video port 1x

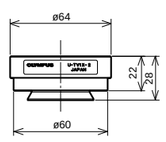

Weight: 150g

Unit: mm

Motorized units

Various motorized units, perfect for automation of equipment, are available.

BX-RLAA+U-D6REMC+U-LH100-3
Motorized BF/DF reflected light illuminator+motorized Nomarski DIC sextuple revolving nosepiece+100W halogen lamp housing

Enables motorized exchange of objective lenses, selection between brightfield and darkfield observations as well as aperture diaphragm closing/opening. The BX-UCB control unit has an RS232C connector, allowing control via a PC.
For method of attaching illuminator, refer to page 24.

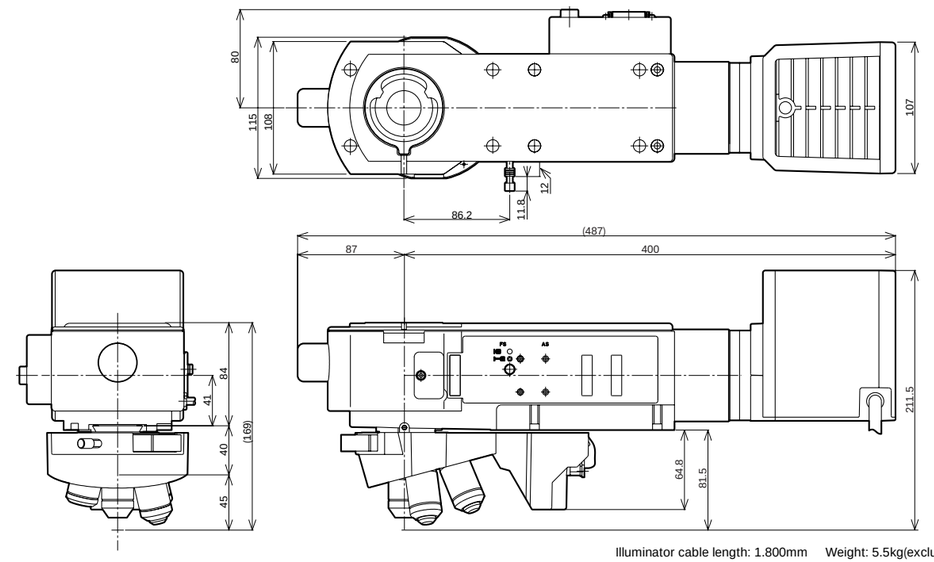

Illuminator cable length: 1.800mm Weight: 5.5kg(exclude objective lens)

BX-RFAA
Motorized universal reflected light illuminator

Reflected light fluorescence illuminator with simultaneous attachment of six mirror units. Incorporates motorized mirror unit changeover and shutter.

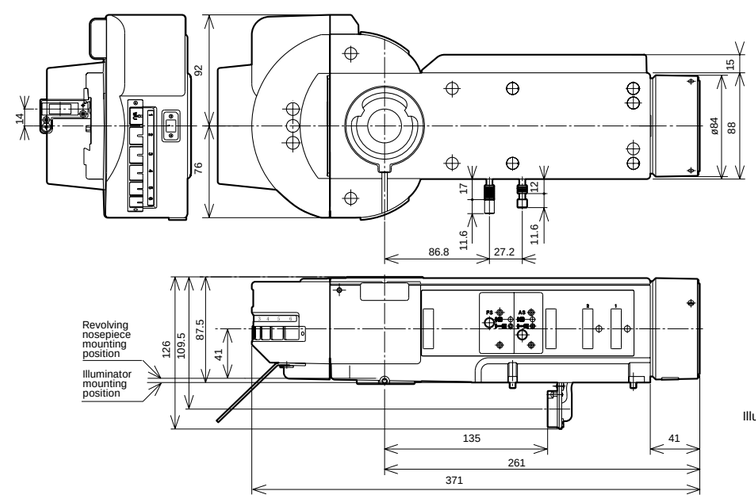

Illuminator cable length: 1.800mm Weight: 4.3kg

Unit: mm

U-D6BDREMC
Motorized sextuple BD revolving nosepiece with slider slot for DIC
U-P5BDREMC
Motorized centerable quintuple BD revolving nosepiece with slider slot for DIC

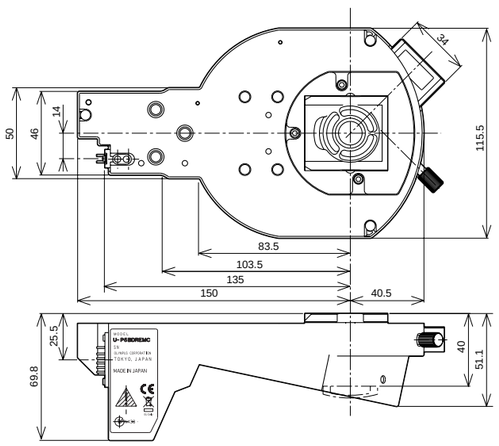

Weight: 1.4 kg

U-D5BDREMC
Motorized quintuple BD revolving nosepiece with slider slot for DIC
U-D6REMC
Motorized sextuple revolving nosepiece with slider slot for DIC
U-P5REMC*
Motorized centerable quintuple revolving nosepiece with slider slot for DIC

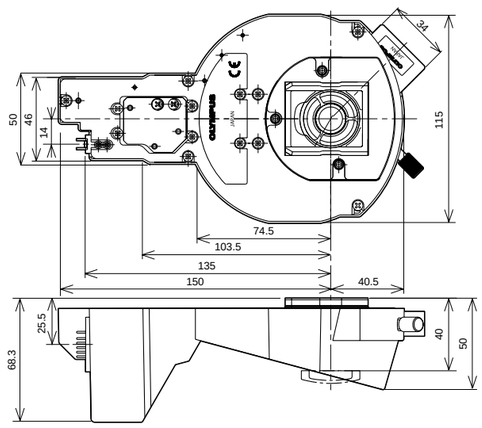

*Please contact Olympus for the availability. Weight: 1.1kg

BX-UCB
Control unit
Motorized units including motorized illuminator and auto focus unit can be totally controlled from BX-UCB

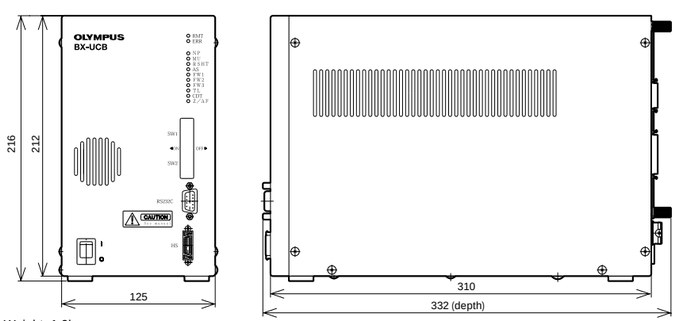

Weight: 1.0kg

U-HSTR2
Hand switch

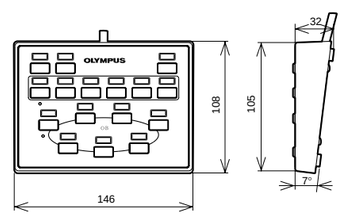

Cable length 2000mm Weight: 370g

* Extension cord U-RMT (1700mm) should be used to connect the lamp housing (U-LH100-3) to the BX-UCB.

BX-REMCB
Control box for motorized nosepiece and BF/DF illuminator
BX-RLAA and U-D5BDREMC/U-D6REMC/U-P5REMC can be controlled from U-HSTR2, or direct from the computer keyboard via an RS232C connector.
* BX-RFAA and U-D5BDREM/U-D6REM combination not applicable.

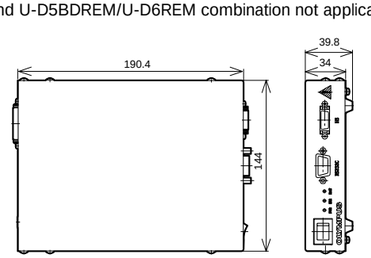

U-ACAD4515
AC adapter for BX-REMCB

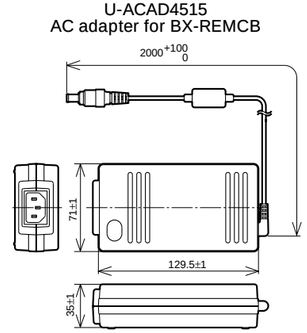

Unit: mm

U-AFA2M-VIS
Active auto focus unit
Featuring an AF laser light source in wavelength 785 nm. The multiple-spots sensor enables the high-speed and stable focusing of specimens with variable height differences.

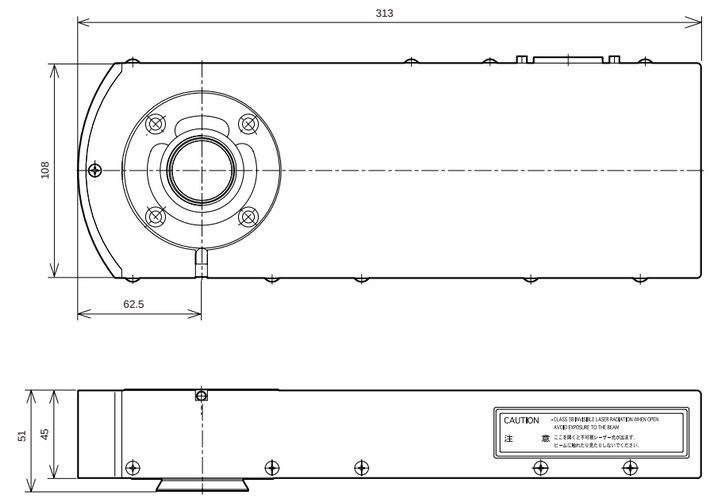

Weight: 2.6kg

Cable
AFA2M-CBL2M Weight: 0.23kg length: 2m
AFA2M-CBL3M Weight: 0.36kg length: 3m

* Consult your Olympus dealer about the motorized focus.

U-FWR
Motorized reflected filter wheel
Accomplish maximum 6 filter position exchange

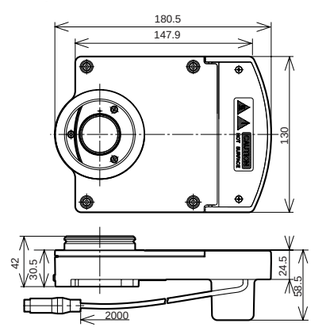

Weight: 1.0kg

Unit: mm

BXFMA-F
Motorized illumination with power focus

A motorized microscope unit for integration with your equipment. Motorized operations such as revolving nosepiece up/down, objective lens switching, aperture diaphragm open/close, and brightfield/darkfield switching are accomplished with this component.
Several microscopic operations are totally controlled from an external unit by combining this component with an auto focus unit.
This is the configuration combined with Active Auto Focus Unit U-AFA2M-VIS, Single Port Tube with Lens U-TLU, a lamphousing, a motorized nosepiece and objective lenses.

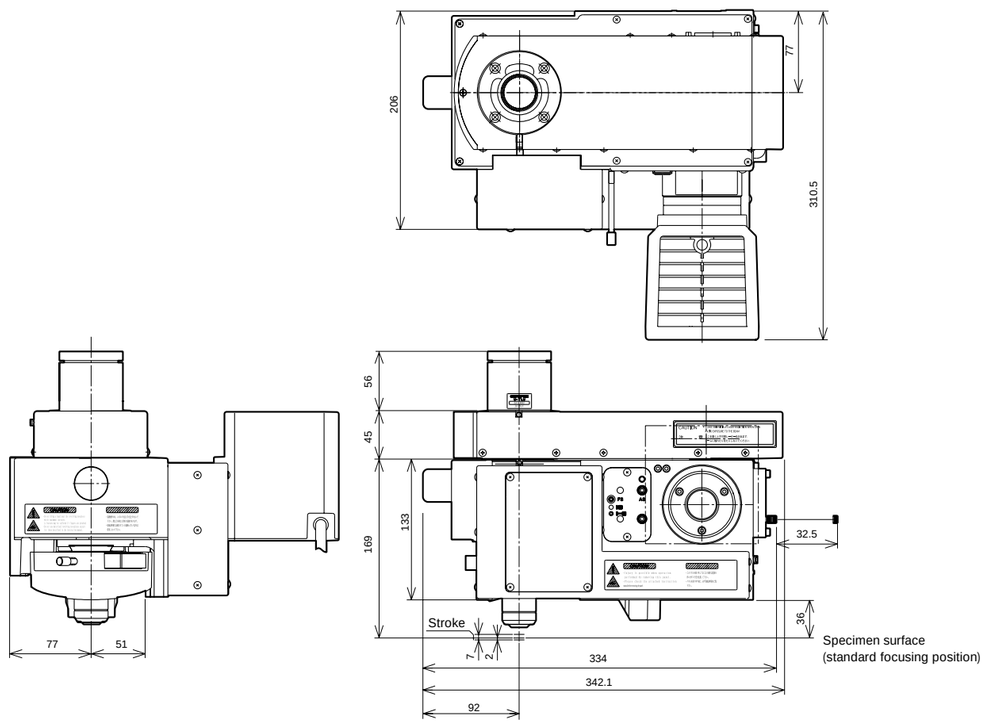

* Consult your Olympus dealer about the mounting dimensions.

Weight: 13kg
(BXFMA-F frame 7.6kg)

U-FH
Focus adjustment knob unit

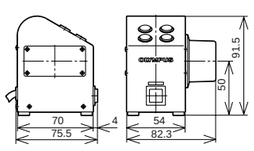

Weight: 760g

U-IFFH
Focus adjustment knob interface

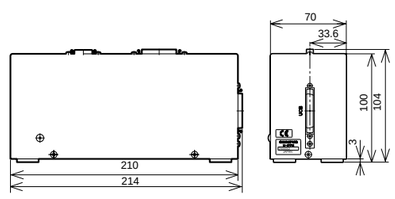

Weight: 1450g

Unit: mm

Deep ultraviolet observation system

This module adds a deep ultraviolet (248nm) optical system to a general microscope.
An ultra-high resolution observation is executed by using an extremely short wavelength ray.

U-UVF248IM
UV248 compatible intermediate tube

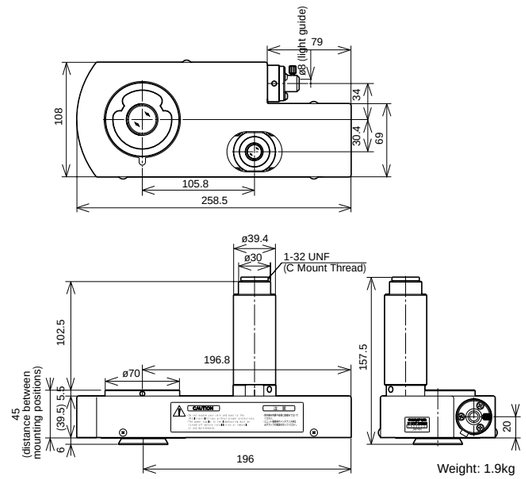

Weight: 1.9kg

U-UVF2FB/5FB
UV quartz light guide

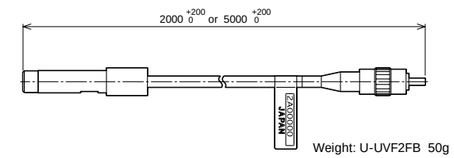

Weight: U-UVF2FB 50g
U-UVF5FB 80g

U-UVF248LB+U-LH80HGXE
UV248 compatible light source box + Mercury Xenon lamp housing

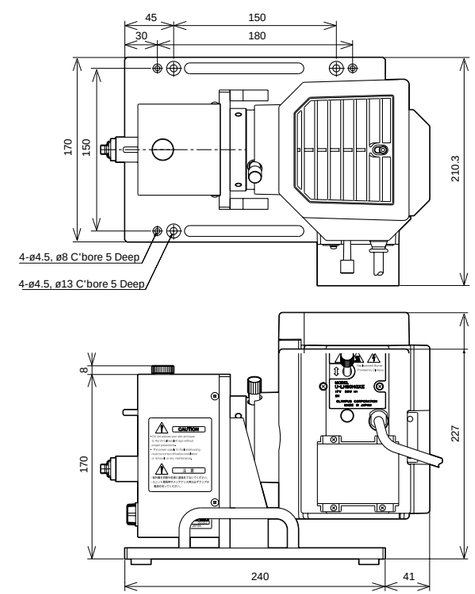

Weight:6.5kg

Unit: mm

1. Field Number (F.N.) and Practical Field of View

The field number (F.N.) is referred to as the diaphragm size of eyepiece in mm unit which defines the image area of specimen. The diaphragm diameter actually seen through eyepiece is known as the practical field of view (F.O.V.) which is determined by the formula:

$$\text{F.O.V.} = \frac{\text{Eyepiece F.N.}}{\text{Objective lens magnification}} \text{ (mm)}$$

2. Working Distance (W.D.)

The distance between the front edge of the objective lens and the specimen surface (with the surface of the cover glass in case of the cover glass objective lens) when the specimen is focused.

3. Parfocal Distance

It is the distance between the objective lens mounting plane and the specimen. In UIS2/UIS objective lenses, the parfocal distance is designed at 45mm.

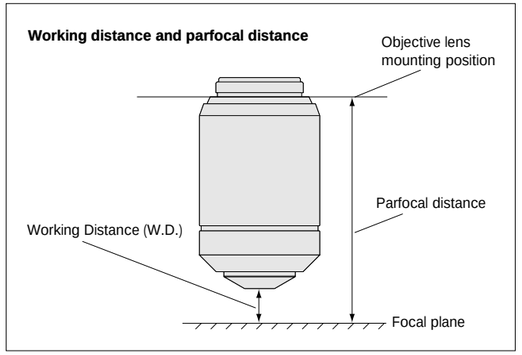

For parfocal distance of the LCPLFLN-LCD series objective lenses, refer to the appropriate objective lens page.

4. Relationship between the objective lens's focal length and magnifications

Indicated magnifications of UIS2/UIS objective lenses are the values when the focal length of the tube lens is 180 mm.

$$M_{(ob)} = \frac{\text{Focal length of tube lens}}{f}$$

$M_{(ob)}$: Objective lens magnification
f: Objective lens's focal length

5. Total Magnification

5.1 Observation through eyepiece (binocular observation)

$$M_{(bino)} = M_{(ob)} \times M_{(oc)}$$

$M_{(bino)}$: Total magnification for binocular observation
$M_{(ob)}$: Objective lens magnification
$M_{(oc)}$: Eyepiece magnification

5.2 Video monitor observation

● Total magnification for video monitor

$$M_{(video\ monitor)} = M_{(ob)} \times M_{(video\ camera\ adapter)} \times \text{Monitor magnification*}$$

$M_{(video\ monitor)}$: Total magnification on the video monitor
$M_{(ob)}$: Objective lens magnification
$M_{(video\ camera\ adapter)}$: Projected magnification for video camera adapter including photo eyepiece *(refer to Figure 1)*

** Refer to Figure 3 for "Monitor magnification"*

● Practical field of view for video monitor observation

$$\text{Practical field of view for video monitor observation} = \frac{\text{Image device size *}}{M_{(ob)} \times M_{(video\ camera\ adapter)}}$$

$M_{(ob)}$: Objective lens magnification
$M_{(video\ camera\ adapter)}$: Projected magnification for video camera adapter including photo eyepiece *(refer to Figure 1 for projected magnifications)*

** Refer to Figure 2 for image device size*

Figure 1 Video camera adapter and projection magnifications

Video camera adapter (Projection lens)	Projection magnifications
U-TV1x-1 + video camera mount adapters	1x
U-TV0.63xC	0.63x
U-TV0.5xC-3	0.5x
U-TV0.35xC-2	0.35x
U-TV0.25xC	0.25x

Figure 2 Imaging device size

Camera format	Diagonal	Horizontal	Vertical
1/3"	6.0mm	4.8mm	3.6mm
1/2"	8.0mm	6.4mm	4.8mm
2/3"	11.0mm	8.8mm	6.6mm

The above table is for standard image device sizes.
Check your device size for precise calculation.

Figure 3 Imaging device size and monitor magnifications

Camera format	Monitor size (diagonal)				
	10"	15"	17"	19"	21"
1/3"	42.3x	63.5x	72.0x	80.4x	88.9x
1/2"	31.8x	47.6x	54.0x	60.3x	66.7x
2/3"	23.1x	34.6x	39.3x	43.9x	48.5x

Example
What is total magnifications for video monitor when objective lens is 50x, video camera adapter U-TV0.5xC, 2/3" video camera and 21" monitor are used ?

•Total magnification on the video monitor:
$m_{(ob)}$=50×, $M_{(video\ camera\ adapter)}$ is 0.5× from Figure 1 and monitor magnification is 48.5× from Figure 3.
$M_{(monitor\ observation)} = M_{(ob)} \times M_{(video\ camera\ adapter)} \times$ monitor magnification
=50×0.5×48.5=1213×

•Practical filed of view for video observation(horizontal side):
$M_{(ob)}$=50×, $M_{(video\ camera\ adapter)}$ is 0.5× from Figure 1 and horizontal side of 2/3" imaging device is 8.8mm from Figure 2

$$\text{Practical field of view for video observation} = \frac{\text{Image device size}}{M_{(ob)} \times M_{(video\ camera\ adapter)}}$$

$$= \frac{8.8\text{ (mm)}}{50 \times 0.5} = 352\mu\text{m}$$

6. Numerical Aperture (N.A.)

The numerical aperture is a key factor to the performance of objective lens (resolving power, focal depth and brightness). The N.A. is determined by the following formula:

$$\text{N.A.} = n \times \sin\theta$$

n=Refraction rate of the medium between specimen and objective lenses. (Air: n=1, oil: n=1.515)
θ: Angle which is made by the optical axis and refraction of the light farthest from the center of the lens.

The visual field brightness (B) of the microscope is determined by the following formula in relation to the objective lens magnification (M). The larger the N.A. and the lower the objective magnification, brightness will increase in the factor of the second power.

$$B \propto \frac{\text{N.A.}^2}{M^2}$$

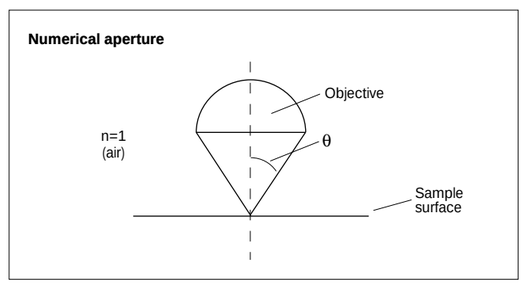

7. Resolving Power

The resolving power of an objective lens is measured by its ability to differentiate two lines or points in an object. The greater the resolving power, the smaller the minimum distance between two lines or points that can still be distinguished. The larger the N.A., the higher the resolving power.

● Resolving power formula
The following formula is generally used for determing resolution.

$$\varepsilon = 0.61 \times \frac{\lambda}{\text{N.A.}} \text{ (Reyleigh formula)}$$

λ: Wavelength or radiation in use
(λ=0.55μm is used for visible light)
N.A.: Objective lens N.A.

Example
MPLFLN100×(N.A.=0.90), λ=0.55μm

$$\varepsilon = 0.61 \times \frac{\lambda}{\text{N.A.}} = \frac{0.3355}{\text{N.A.}} = \frac{0.3355}{0.90} = 0.37\mu\text{m}$$

8. Focal depth of Microscope

The focal depth refers to the depth of the specimen layer which is in sharp focus at the same time, even if the distance between the objective lens and the specimen plane is changed when observing and shooting the specimen plane by microscope. As human eyes are individually different in the ability of their focus adjustment, each person's perception of the focal depth varies. At present, the Berek formula is generally used, because it gives a focal depth value that often coincides with that obtained through experiments.

Focal depth formula

● Visual observation (Berek formula)

$$\pm \text{D.O.F.} = \frac{\omega \times 250{,}000}{\text{N.A.} \times M} + \frac{\lambda}{2(\text{N.A.})^2} \text{ (μm)}$$

D.O.F.: Depth Of Focus

ω: Resolving power of eyes 0.0014
(when optical angle is 0.5 degrees)
M: Total magnification
(objective lens magnification x eyepiece magnification)

$$\rightarrow \pm \text{D.O.F.} = \frac{350}{\text{N.A.} \times M} + \frac{0.275}{\text{N.A.}^2} \text{ (}\lambda\text{=0.55μm)}$$

This indicates that the focal depth becomes smaller as the numerical aperture becomes larger.

Example
With MPLFLN100×(N.A.=0.90), WHN10×:

$$\pm \text{D.O.F.} = \frac{350}{0.90 \times 1{,}000} + \frac{0.275}{0.81} = 0.39 + 0.34 = 0.73\mu\text{m}$$

● Video camera
In the case of a video camera, the focal depth will vary according to number of pixels of CCD, optical magnification, and numerical aperture. The above-mentioned formula is used as a rough guide only.

9. Aberrations

A difference between an ideal image and an actual image that passes through an optical system is called an "aberration."

9.1 Requirements for Ideal Image Formation

The following three requirements must be satisfied to form an image with no aberration, or an ideal image.

(i) All the light rays coming from a single point and passing through an image formation optical system converge on a single point.

(ii) Image points, which correspond to object points on the same plane perpendicular to the optical axis, are present on the same plane.

(iii) The planar shape of an object and the planar shape of an image that are on the same plane perpendicular to the optical axis have a similarity relation.

Figure 9-1 Requirements for Ideal Image Formation

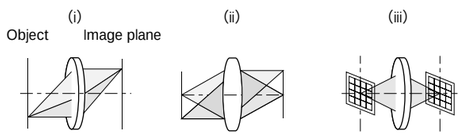

In an actual optical system, however, it is very difficult to strictly meet the requirements for ideal image formation and this causes "aberrations" that interfere with image forming performance.

9.2 Classification of Aberrations

Aberrations that interfere with image forming performance are classified as shown below in Figure 9-2.

Seidel's aberration = "Expansion of a point image" + "Curvature of image plane" + "Deformation"

Figure 9-2 Classification of Aberrations

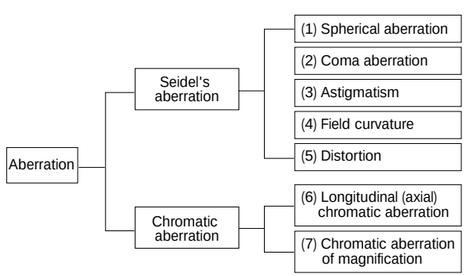

Types (1) to (3) correspond to "expansion of a point image" that goes against requirement (i) for ideal image formation in Figure 9-1. Type (4) corresponds to "curvature of image plane" that goes against requirement (ii) in Figure 9-1. Type (5) corresponds to "deformation" that goes against requirement (iii) in Figure 9-1. Types (6) and (7) correspond to "color blur" of images caused by characteristics of glass materials used for the optical system. "Expansion of a point image" can also be expressed by "wavefront aberration" that regards the light as "waves" and takes account of the phase to include the influence of diffraction.

(1) Spherical aberration

When light rays coming out of an axial object point enter a lens, the light rays with a larger numerical aperture (N.A.) are subjected to stronger refraction power and cross the optical axis in positions with larger differences from the ideal image formation position. The aberration caused this way by different image forming positions due to differences in N.A. of axial light rays is called "spherical aberration." ("Spherical aberration" is proportional to the cube of N.A.)

Figure 9-3 Spherical Aberration

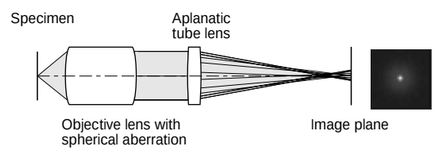

It is said that objective lenses with larger N.A. have better resolution but worsen spherical aberration. Our advanced design and manufacturing techniques have realized good optical performance even with large numerical aperture.

(2) Coma aberration

Even though spherical aberration is compensated to be very small, there are cases where light rays coming out of an off-axis object point are not condensed to a single point on the image plane but generate asymmetric blur just like a comet leaving traces. This is called coma aberration.

Figure 9-4 Coma Aberration and Spot Shape on the Image Plane

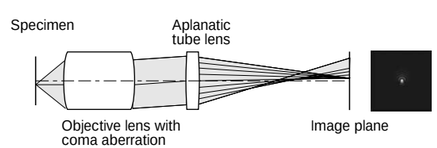

(3) Astigmatism

Even though a lens is compensated for spherical aberration and coma aberration, there are cases where an image of an off-axis object point is not focused to a single point but separated to a concentric line image and a radial line image. This is called "astigmatism." When astigmatism is present, a point image blurs vertically and horizontally, before and after the focus position.

Figure 9-5 Astigmatism and Change in Spot Shape in Different Focus Positions

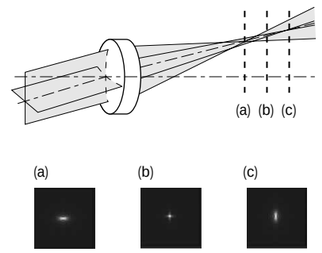

(4) Field curvature

An image plane of an object on a plane perpendicular to an optical axis does not always become a plane perpendicular to the optical axis, but it generally becomes a curved plane. This symptom is called "field curvature."

When field curvature is present, the image is more displaced as it becomes closer to the periphery of the visual field. Therefore, when the center of an image is brought into focus, blur occurs in the peripheral areas of the image. To bring the entire image, including the periphery, into clear focus, it is necessary to adequately compensate for this type of aberration.

(5) Distortion

When there is no similar relation between a planar shape on an object and a shape on the image plane, this is called "distortion." When distortion is present, a square image appears in a shape of a barrel or pin-cushion as shown in Figure 9-6.

Figure 9-6 Distortion

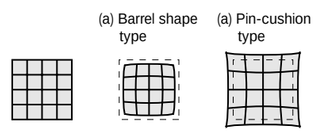

The microscope optical system contains some distortion. When distortion is present, it can bring erroneous results of shape measurements. When a microscope is used for precision measurements, pay close attention to this aberration, for example, by providing it with an aberration compensation function.

(6) Chromatic aberration

Glasses used for optical systems have different refractive indexes depending on the wavelength. This causes differences in focal length between wavelengths and generates displacement of image forming position. This phenomenon is called "chromatic aberration," which is sometimes subdivided into axial displacement on the optical axis, called "axial chromatic aberration" (or lateral chromatic aberration) and displacement on the image plane, called "chromatic aberration of magnitude."

Many special glass materials are used, e.g., for apochromats (MPlanApo in Olympus), to eliminate chromatic aberration in a wide range from violet light (g-rays with wavelength of 435 nm) to red light (c-rays with wavelength of 656 nm).

9.3 Wavefront Aberration

Since a long time ago, aberrations have been used in "geometric optics," which considers light as "light rays." Microscope optical systems are often used for observation of very small specimens at a wavelength level, and sometimes adopt "wave optics," which regards light as "waves" and handles the phase information, taking account of the influence of diffraction.

In such a case, "wavefront aberration" is used for evaluation.

As shown below, when requirements for ideal imaging are satisfied in a microscope optical system, the spherical wavefront (spherical waves) coming from a single point on an object (specimen) is converted to plane waves through an ideal objective lens. The plane waves are converted to spherical waves through an ideal tube lens, and condensed to a single point. The wavefront of these waves is called the "ideal wavefront."

Figure 9-7 Ideal Microscope Optical System

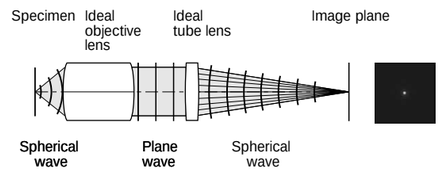

Based on the figure indicated for (1) spherical aberration, the behavior of the wavefront in an optical system that has an aberration is described below.

Figure 9-8 Illustration of Wavefront Aberration

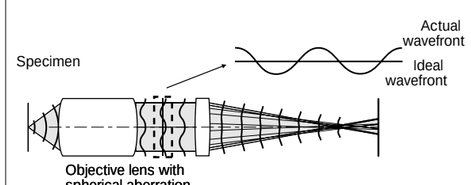

A difference (a degree of disagreement) between the ideal wavefront and the actual wavefront shown above is called "wavefront aberration."